STULZ

CLIMATE. CUSTOMIZED.

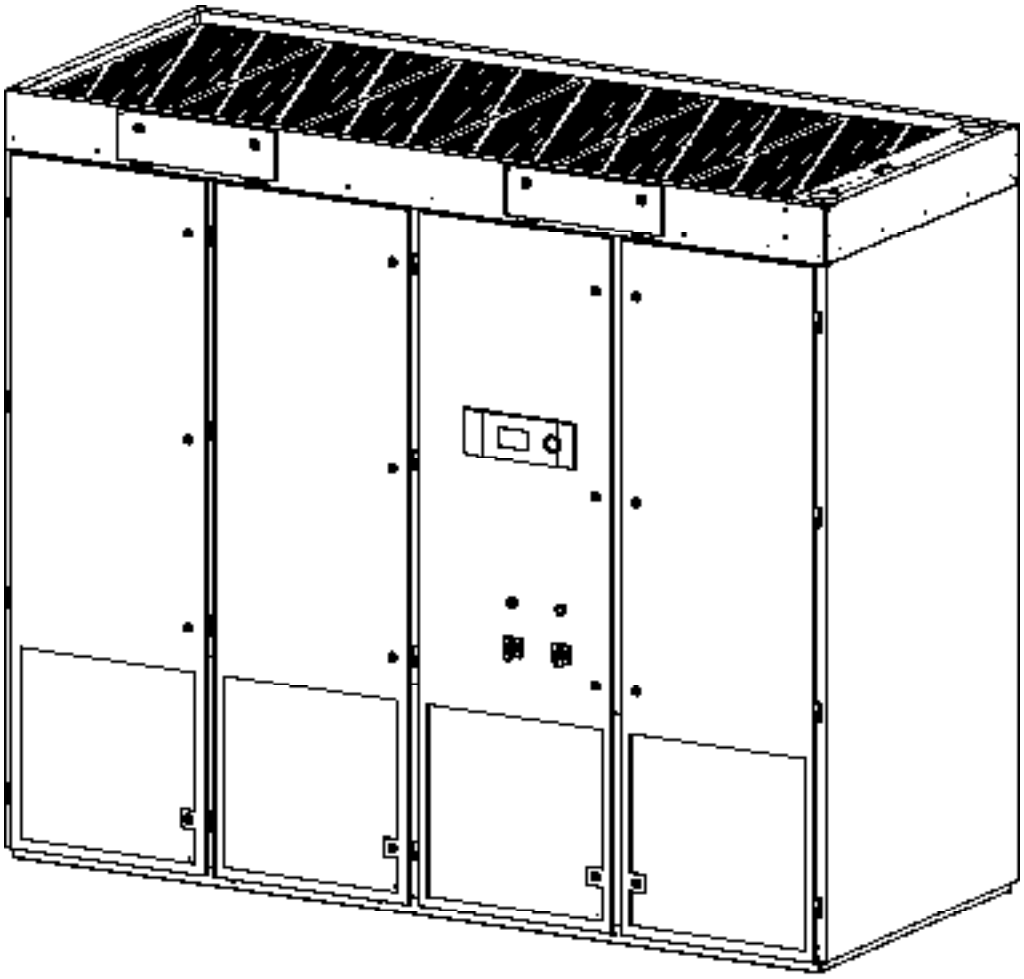

CyberAir® CW

Installation, Operation and Maintenance Manual

Perimeter Mounted Precision Air Handlers
60 kW - 730 kW / 60 Hz

Notice

This document contains information protected by copyright. All rights are reserved. The owner of the equipment for which this manual is written may photocopy the contents of this manual for internal use only. No part of this document may be photo- copied, reproduced, or translated into another language for use by anyone other than the owner of the equipment for which this manual is written without the prior written consent of STULZ Air Technology Systems, Inc. (STULZ).

This document contains confidential and proprietary information of STULZ Air Technology Systems, Inc. Distributing or photo- copying this document for external distribution is in direct violation of U.S. copyright laws and is strictly prohibited without the express written consent of STULZ.

Unpublished — rights reserved under the copyright laws of the United States and of other countries. Other brands and tradenames are trademarks of their respective owners.

Copyright 2013 by STULZ Air
Technology Systems, Inc. Printed in the
United States of America.
All rights reserved.

STULZ Air Technology Systems, Inc.
1572 Tilco Drive
Frederick, MD 21704, USA
https://www.stulz-usa.com/en/

Table of Contents

1.0 Introduction 1-1
1.1 General 1-1
1.2 Product Description 1-1
1.3 Product Warranty 1-2
1.4 Safety 1-3
1.4.1 General 1-3
1.4.2 Safety Summary 1-3
1.5 General Design 1-5
1.5.1 Upflow Model Internal Layout 1-7
1.5.2 Downflow Model Internal Layout 1-7
1.5.3 Electric Box Access 1-8
1.5.4 Circuit Breakers/Motor Start Protectors 1-8
1.5.5 Coils 1-8
1.5.6 EC Fans 1-8
1.5.7 Temperature/Humidity Sensor 1-8
1.5.8 Heaters 1-8
1.6 Optional Equipment 1-8
1.6.1 Humidifier 1-8
1.6.2 Condensate Pump 1-8
1.6.3 Smoke Detector 1-9
1.6.4 Firestat 1-9
1.6.5 Auto Power Transfer Switching 1-9

2.0 Installation 2-1
2.1 Receiving the Equipment 2-1
2.2 Site Preparation 2-1
2.2.1 Conditioned Space 2-1
2.3 Rigging 2-2
2.4 Mounting/Placement 2-2
2.5 Air Distribution Connection 2-4
2.5.1 Upflow Configuration Air Patterns 2-4
2.5.2 Downflow Configuration Air Patterns 2-5
2.6 Optional Equipment (Field Installed) 2-5
2.6.1 Floor Stand 2-5
2.6.2 Plenum Box 2-7
2.6.3 Condensate Pump 2-8
2.6.4 Remote Temperature/Humidity Sensor 2-8
2.6.4.1 Types of Control 2-8
2.6.5 Remote Water Detector 2-9
2.7 Piping Connections 2-9
2.7.1 Chilled Water/Hot Water 2-9
2.7.2 Condensate Drain 2-10
2.7.2.1 Gravity Drain 2-10
2.7.2. Condensate Pump 2-10
2.7.3 Humidifier 2-10
2.8 Utility Connections 2-11
2.8.1 Main Power 2-11
2.8.2 Controls 2-13
2.8.3 Optional Equipment 2-13
2.8.3.1 Remote Temperature/Humidity Sensor 2-13
2.8.3.2 Remote Water Detector 2-13
2.9 System Settings and Adjustments 2-13
2.9.1 Chilled Water Circuit 2-13
2.9.2 EC Fan(s) 2-13
2.9.3 Humidifier Adjustment 2-13

3.0 Start-Up/Commissioning 3-1
3.1 Operation 3-1
3.2 Step by Step Start-Up Instructions 3-1
3.3 Microprocessor Controller Programming 3-1

4.0 Maintenance/Repairs 4-1
4.1 Periodic General Maintenance 4-1
4.1.1 A/C Unit 4-1
4.1.1.1 Filter 4-1
4.1.1.2 Fan 4-1
4.1.1.3 Drain Pan 4-1
4.1.1.4 Coils 4-1
4.1.1.5 Heat/Reheat 4-1
4.1.1.6 Humidifier 4-1
4.1.1.7 Condensate Pump 4-2
4.2 Troubleshooting 4-2
4.3 Field Service 4-4
4.3.1 General Common Repairs/ Component Replacement 4-4
4.3.1.1 Cooling System 4-4
4.3.1.2 Leaks 4-4
4.3.1.3 Humidifier Cylinder Replacement 4-4
4.3.1.4 Filter Replacement 4-5
4.3.1.5 Fan Cartridge Removal/Replacement 4-5

5.0 Product Support 5-1
5.1 Technical Support 5-1
5.2 Obtaining Warranty Parts 5-1
5.3 Obtaining Spare/Replacement Parts 5-1

List of Figures

Figure 1 Typical Internal Layout- Upflow 1-7
Figure 2 Typical Internal Layout- Downflow 1-7
Figure 3 Auto Transfer Disconnect Switches 1-9
Figure 4 Preferred Power Selector Switch 1-9
Figure 5 Recommended Installation Clearance ... 2-1
Figure 6 Typical CFU (Upflow) Installation 2-2
Figure 7 Typical CFD (Downflow) Installation 2-3
Figure 8 Upflow Configuration Air Patterns 2-4
Figure 9 Downflow Configuration Air Patterns..... 2-5
Figure 10 Plenum Installation 2-6
Figure 11 Temperature/Humidity Sensor Location 2-7
Figure 12 Condensate Pump..... 2-10
Figure 13 Sample Nameplate 2-11
Figure 14 Electric Box..... 2-12

Appendix A - Forms

Checklist for Completed Installation A-1
Periodic General Maintenance
Checks and Service Checklist A-2

Appendix B - Glossary

Definition of Terms and Acronyms B-1

Nomenclature								
CFX-XXX-XXX-X-XX								
CF	Air Pattern	Capacity (kW)	Cooling Method	Number of Circuits	Piping Connections	Secondary Cooling Options	Fan Location	Additional Special Options
CyberAiR Floor Mounted Systems	D = Downflow U = Upflow	060, 090, 120, 150, 180, 190, 280, 310, 360, 400, 510, 630, 730	C = CW	1 2	R = Right Hand Bottom Piping L = Left Hand Bottom Piping*	0 = None A = Air Side Economizer	0 = No Fans I = In Unit	0 = Standard S = Special*
CF	D	280	C	1	R	0	I	0

Call Product Support at 888 529 1266 for additional information.

Example:

280 kW Capacity, Single Circuit, Chilled Water, Downflow, Floor Mounted System; with Right Hand Bottom Piping, Internal EC Fans, and No Additional Options : CFD-280-C1R-0-I0

1.0 INTRODUCTION

1.1 General

The CyberAiR floor mounted, precision air conditioning system covered by this manual is designed and manufactured by STULZ Air Technology Systems, Inc. (STULZ) and uses the latest, state-of-the-art control technology. Recognized as a world leader, STULZ provides air conditioning systems with the highest quality craftsmanship using the finest materials available in the industry. The unit will provide years of trouble free service if installed and maintained in accordance with this manual. Damage to the unit from improper installation, operation or maintenance is not covered by the warranty.

STUDY the instructions contained in this manual. They must be followed to avoid difficulties. Spare parts are available from STULZ to insure continuous operation. Using substitute parts or bypassing electrical or cooling components in order to continue operation is not recommended and will VOID THE WARRANTY. Due to technological advancements, components are subject to change without notice.

CyberAiR systems are designed to be installed indoors unless otherwise noted on the equipment.

1.2 Product Description

CyberAiR systems are designed to be the most versatile and flexible floor mounted air conditioning systems in the industry. CyberAiR units are available in upflow and down flow air configurations and utilize highly efficient, electronically commutated (EC) fans. The cooling capacity, in kW, will depend on the unit size which can range from 60 to 730 kW. (1 kW = 3415 BTU/Hr). Refer to the unit nameplate to identify the model number and cooling capacity of your unit.

CyberAiR systems operate with an external source of chilled water. The chilled water system is a closed loop circuit in which cold water is circulated through a chilled water coil. On demand for cooling, the microprocessor controller begins modulating the chilled water valve open. Chilled water flows to the coil at a rate that varies proportionally to the amount of cooling required. The controller modulates the valve opening together with the fan speed to meet the user selectable temperature setpoint. Heat from the surrounding air is transferred through the finned tubing of the coil into the cold water. Water is then recirculated back to the cold water source.

CyberAiR systems are designed to supply air to only one room.

NOTE

CyberAiR systems are strictly for non-residential applications.

The functional modes of operation, in addition to cooling, are heating, humidification, dehumidification and filtration which provide complete environmental control of a conditioned space.

There are two air flow pattern configurations, upflow and downflow, and several cabinet sizes based on the type of system and capacity. Regardless of configuration, CyberAiR systems are compact and versatile. See the Installation drawing provided with your unit for the layout and dimensions of the cabinet.

The CyberAiR unit is provided with a factory mounted, main power disconnect switch with a lockable handle. The disconnect switch electrically isolates the unit during routine maintenance. The system incorporates state of the art component protection with the use of motor start protectors or circuit breakers.

The advanced E^2 microprocessor controller is provided as a standard for CyberAiR systems. This controller provides superior features for more comprehensive control of the unit. These features include full alarm system; input/output monitoring status; full integrated control of heating, cooling, humidification, and dehumidification; multi-A/C unit control and remote communication with building management systems.

The controller user interface display panel is typically mounted on the front door of the A/C unit. It features a high resolution touch screen display offering enhanced graphical display capabilities and a round membrane type keypad to navigate through the controller menus and adjust operating parameters.

An operating manual for the E^2 controller is provided under separate cover. Refer to that manual for detailed instructions on operating the system controller.

Touch Screen Display

1.3 Product Warranty :

See the contract.

1.4 Safety

1.4.1 General

STULZ uses **NOTES** along with **CAUTION** and **WARNING** symbols throughout this manual to draw your attention to important operational and safety information.

A bold text **NOTE** marks a short message in the information to alert you to an important detail.

A bold text **CAUTION** safety alert appears with information that is important for protecting your equipment and performance. Be especially careful to read and follow all cautions that apply to your application.

A bold text **WARNING** safety alert appears with information that is important for protecting you from harm and the equipment from damage. Pay very close attention to all warnings that apply to your application.

A safety alert symbol ⚠ accompanies a general **WARNING** or **CAUTION** safety statement.

A safety alert symbol accompanies an electrical shock hazard **WARNING** or **CAUTION** safety statement.

1.4.2 Safety Summary

The following statements are general guidelines followed by warnings and cautions applicable throughout the manual.

Prior to performing any installation, operation, maintenance or troubleshooting procedure, read and understand all instructions, recommendations and guidelines contained within this manual.

Certain maintenance or cleaning procedures may call for the use and handling of chemicals, solvents, or cleansers. Always refer to the manufacturer's Material Safety Data Sheet (MSDS) prior to using these materials. Clean parts in a well-ventilated area. Avoid inhalation of solvent fumes and prolonged exposure of skin to cleaning solvents. Wash exposed skin thoroughly after contact with solvents.

WARNING

All personnel working on or near equipment should be familiar with hazards associated with electrical maintenance. Safety placards/stickers have been placed on the unit to call attention to all personal and equipment damage hazard areas. Never work on electrical equipment unless another person who is familiar with the operation and hazards of the equipment and competent in administering first aid is nearby.

This equipment should be serviced and repaired by a journeyman or a qualified refrigeration technician only.

To prevent personal injury, stay clear of rotating components as automatic controls may start them unexpectedly. Turn off power to the unit unless you are performing tests that require power. With power and controls energized, the unit could begin operating at any time.

When working on electrical equipment, remove all jewelry, watches, rings, etc.

Hazardous voltage will still be present inside the electric box at the motor start protectors and circuit breakers, even with the unit turned off at the microprocessor controller. To isolate the unit for maintenance, turn off power at the main power disconnect switch.

Always disconnect the main power supply to the equipment at the main power disconnect switch before beginning work on the equipment. A lock-out tag-out procedure should be followed to ensure that power is not inadvertently reconnected.

Never operate the unit with any cover, guard, screen panel, etc. removed unless the instructions specifically state otherwise, then do so with extreme caution to avoid personal injury.

Do not use chloride based water conditioning additives in the condensate drain pans. This will cause corrosion to occur on the coil fins.

CAUTIONS ⚠

When the air conditioner is in the cooling mode, the return air-intake and discharge (supply) must be free of obstructions. Ensure panels are secure and latched into position.

If a lifting device is used to move a unit, ensure it is capable of supporting the weight of the unit.

Do not use cleaning solvents near open flame or excessive heat. Wear eye protection when blowing solvent from parts. The pressure-wash should not exceed 30 psig. Solvent solutions should be disposed of in accordance with local and state regulatory statutes.

Chilled water cooling coils and associated piping circuits are **pressurized (up to 100 psi)** and sealed when they leave the factory. Before hooking up the interconnecting piping, observe appropriate safety precautions and release the pressure via an available stem valve or Schrader valve prior to uncapping the pipes.

After the customer furnished supply and return piping is assembled, the piping system must be thoroughly cleaned prior to connecting it to the unit. Failure to do so will result in equipment problems.

After the supply and return piping is connected to the unit, the entire system must be flushed prior to beginning operation.

When installing and filling the water/glycol loop, all air must be bled from the piping system.

Once in service, a CyberAiR CW unit should not be drained and taken out of service for an extended period of time. Formicary corrosion can occur.

1.5 General Design

The CyberAiR unit is housed in a steel frame type cabinet and is rated for indoor use. The cabinet is coated with a durable powder coat finish to protect against corrosion. Hinged doors are located on the front of the cabinet. The doors may be removed for easy access to all internal components. Operator controls are conveniently located at the front of the cabinet. CyberAiR systems are available with upflow or downflow air discharge pattern. Cabinet sizes vary according to system capacity.

Upflow Models

Front Free Return

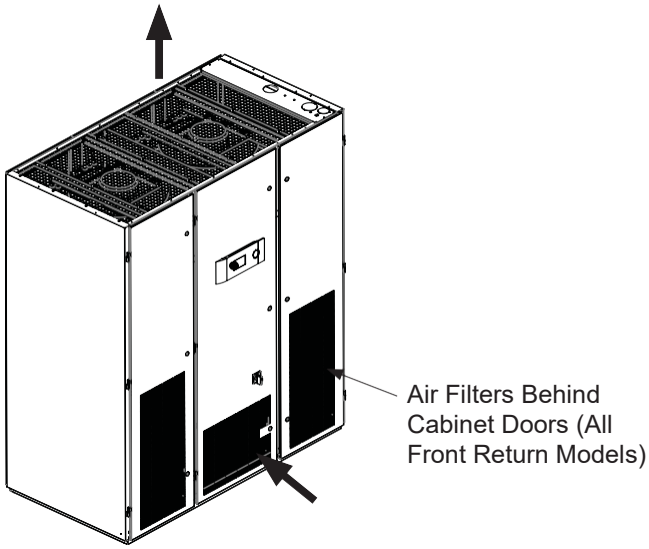

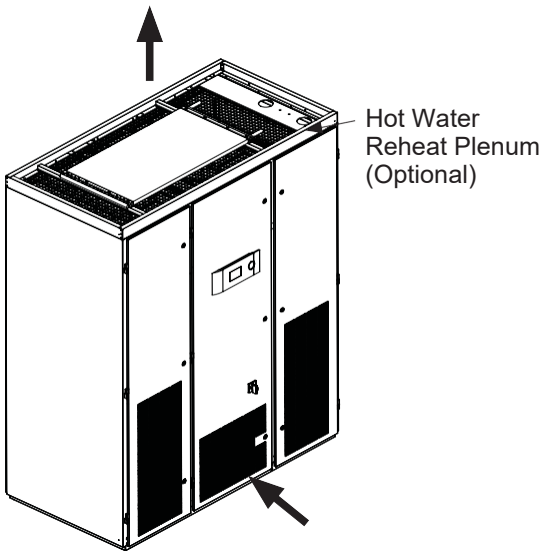

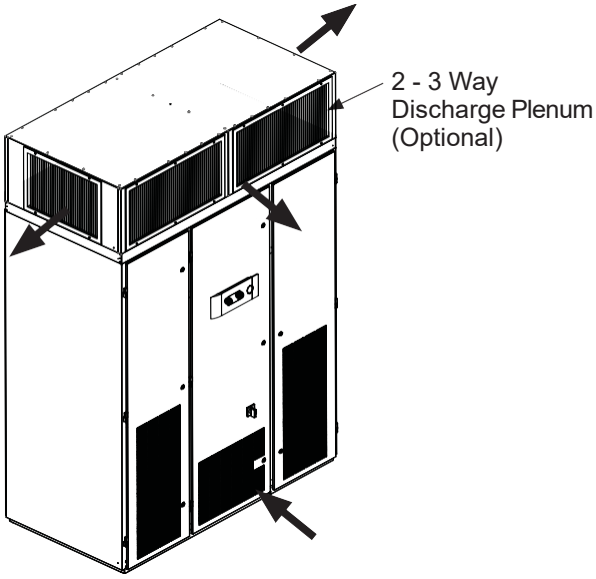

Rear Ducted Return

Available Option

Contact STULZ for details

NOTE

Customer specified, non-standard features or design variations may not be described in this manual. Refer to the installation and/or electrical drawings supplied with your unit for details on additional feature(s). In some cases an addendum to this manual may also be included to further describe the feature(s).

Downflow Models

Floor Discharge

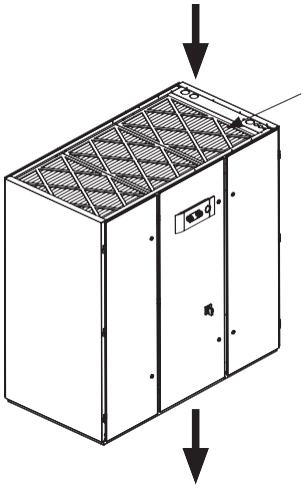

Internal Air Filters Accessible Behind Cabinet Doors (Models CFD-060 to CFD-280)

Front Free Discharge

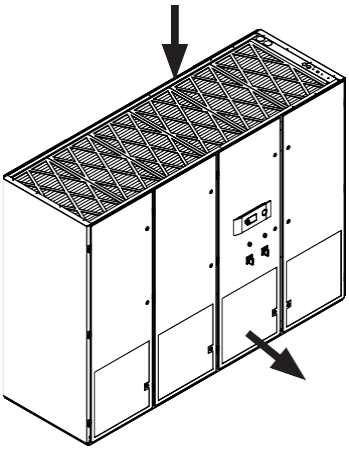

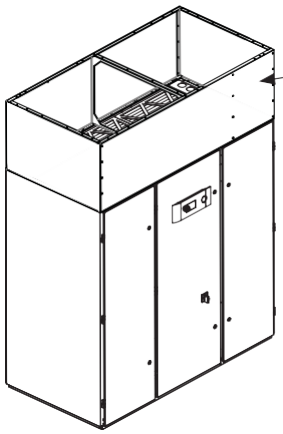

Plenum Extension (Optional)

Rear Free Discharge

Available Option

Contact STULZ for details

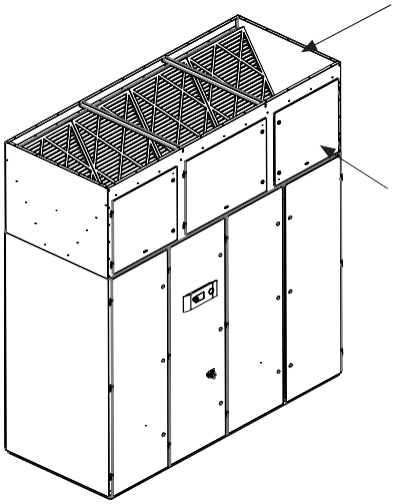

External Air Filter Plenum. Optional for CFD-060 Through CFD-280 Models. Required for Models CFD-310 Through CFD-730.

Hinged Filter Access Panel

Rear Ducted Discharge

Available Option

Contact STULZ for details

1.5.1 Upflow Model Internal Layout

Figure 1 depicts a sample internal layout of a CFU (upflow) unit and identifies the major components.

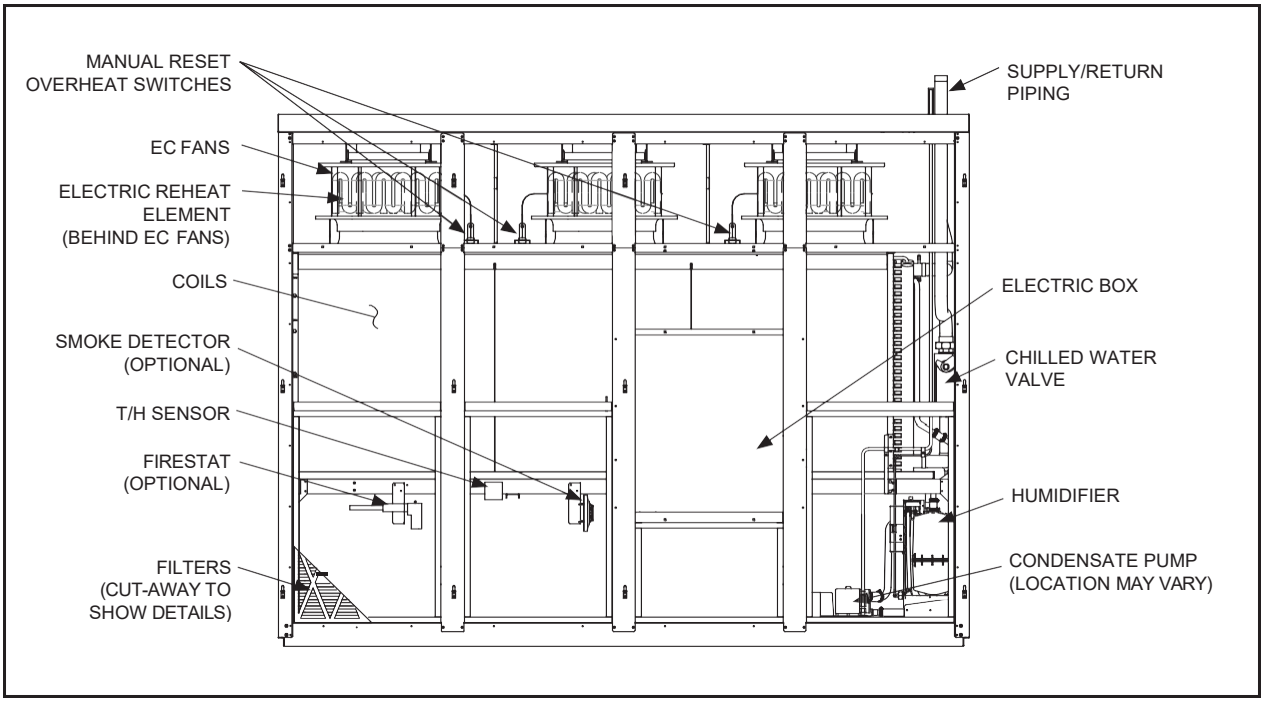

Figure 1- Typical Internal Layout- Upflow
(Front View - Doors Removed)

1.5.2 Downflow Model Internal Layout

Figure 2 depicts a sample internal layout of a CFD (downflow) unit and identifies the major components. The location of major components vary depending on model number and options purchased.

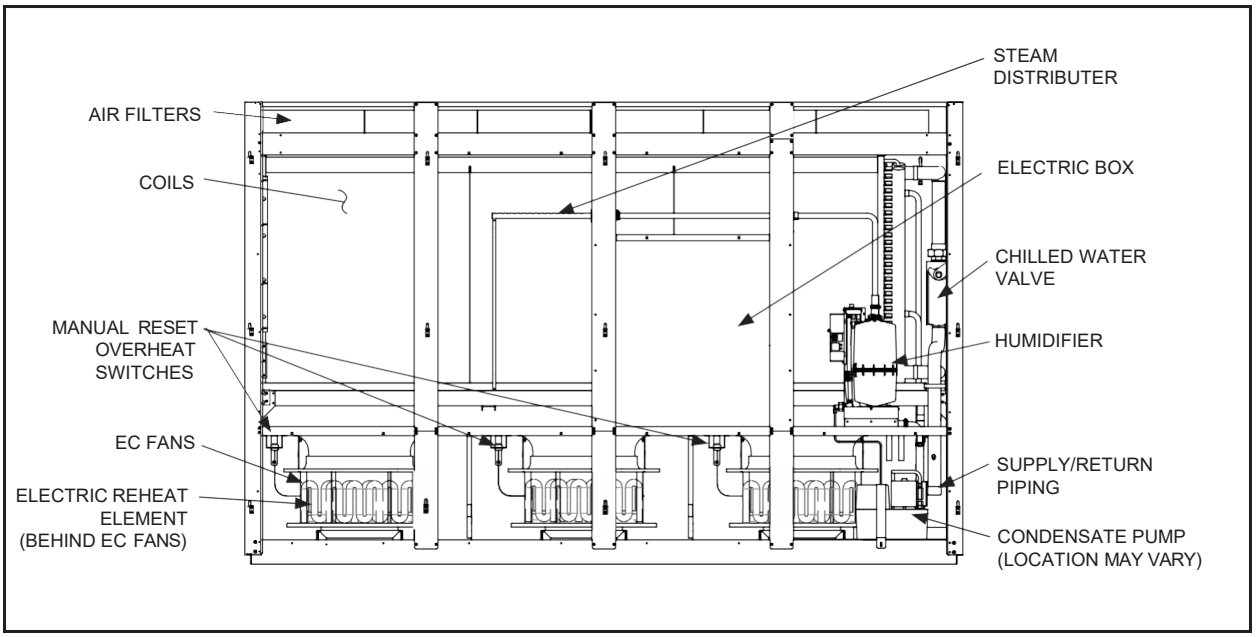

Figure 2- Typical Internal Layout- Downflow
(Front View - Doors Removed)

1.5.3 Electric Box Access

The electrical components are protected in an enclosure located inside the cabinet behind the hinged access door with the controller display panel. The main power service disconnect switch must be turned Off to gain access to the components within the electric box. The handle of the switch may be locked in the "Off" position to prevent unintended operation.

1.5.4 Circuit Breakers/Motor Start Protectors

Individual overload protection is provided by circuit breaker(s) and motor start protectors. These switches must be manually reset once the overload condition is cleared.

1.5.5 Coil(s)

The cooling and optional hot water reheating coils are aluminum finned/copper tube construction. The coils are leak tested prior to installation by the factory.

1.5.6 EC Fan(s)

The unit is equipped with high efficiency, Electronically Commutated (EC) fan(s). EC Fans utilize a brushless motor equipped with permanent magnets and permanently lubricated ball bearing. The Fan impellers are backward curved and attached to the rotor casing. The fan is balanced and aerodynamically optimized to minimize vibration.

The fan does not utilize drive belts. The fan speed is variable via a 0 to 10 VDC signal from the system controller. The fan motor is equipped with integral electronics and does not require the addition of secondary electronics such as thermal protection, inverters or filters. The fan will not produce AC inverter whine.

EC fans feature an integrated monitoring function to protect the motor and electronics against damage from jamming, phase loss or overheating. The E^2 controller monitors each fan via the modbus and if any of the following failure conditions occur, the motor automatically stops and an alarm is signaled:

a. Locked rotor[(1)]
b. Low main supply voltage[(1)]
c. Loss of a phase[(1)]
d. Over-heating of electronics[(2)]
e. Over-heating of motor[(2)]

[(1)] Upon correction of these failure conditions, the motor will automatically reset.

[(2)] Upon correction of these failure conditions, the motor must be manually reset by turning off power for 20 seconds.

If a communication loss occurs, the fans will run at their last received output command until a new command is received (Modbus comm is back online). If a power cycle occurs, (dual power changeover or power outage) the fans will begin to run immediately to their last received command once power is restored. Once the controller boot cycle is completed (and the Modbus network is online), the fans will run to the commanded output.

1.5.6.1 Fan Cartridges

Larger cabinets, such as with models CFD-510, CFD-630 and CFD-730, contain EC fans assembled in pairs to removable, slide out cartridges with hand grip slots. Each fan in a cartridge is electrically connected inside the cabinet via quick connect fittings. This simplifies fan removal should it become necessary to service them.

1.5.7 Temperature/Humidity Sensor

As a standard, a temperature/humidity (T/H) sensor is factory mounted in the return air stream for room air control. The T/H sensor monitors the return air conditions and provides input signal(s) to the system controller to manage the operation of the A/C unit consistent with the set points entered in the controller. As an option, sensor(s) may be shipped loose for field installation. Refer to the electrical drawing supplied with your unit for details specific to your system. See Section 2.6.5.1 for descriptions of the types of T/H control methods that may be utilized.

1.5.8 Heaters

The precision A/C unit incorporates heaters for re-heating the supply air as required to offset the sensible cooling of the system during the dehumidification cycle and for the automatic heating mode. Electric resistance heating elements may be factory installed in the supply airstream to heat the supply air (depending on unit capacity).

As an option, hot water reheat may be selected. For this option a hot water heating coil is installed in the supply air stream. A modulating valve is provided to control the flow of hot water through the coil to maintain the correct reheat temperature.

1.6 Optional Equipment

1.6.1 Humidifier

CyberAiR systems may be equipped with an optional electrode steam humidifier. For this option a humidifier is installed inside the air conditioner with automatic fill and drain valves and associated piping. Operation of the humidifier's fill and drain cycles is

based on water conductivity and is maintained by the humidifier controller. An operating manual for the humidifier is provided under separate cover. Refer to that manual for detailed information on the operation and maintenance of the humidifier.

1.6.2 Condensate Pump

An optional condensate pump may be factory installed. The pump automatically eliminates condensate and humidifier flush water (if applicable) from the drain pan. An internal overflow safety switch is wired to the system controller to automatically signal an alarm should an overflow occur.

1.6.3 Smoke Detector

Optionally mounted in the return air stream, a photo-electric smoke detector is used to sense the presence of smoke and signal the controller when a smoke alarm condition exists.

1.6.4 Firestat

Optionally mounted in the return air stream, a fire detector senses high return air temperature and signals the controller when a fire alarm condition exists.

1.6.5 Auto Power Transfer Switching

An automatic transfer, main power switching system is optionally available for critical operations. With this option, two main power service disconnect switches are provided on the door of the cabinet to connect two independent power sources (see Figure 3).

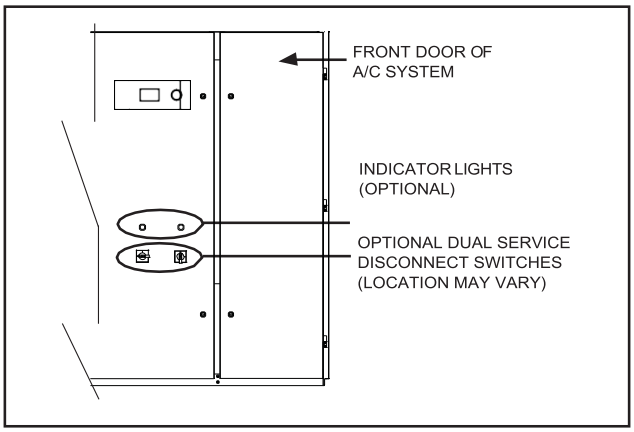

Figure 3- Auto Transfer Disconnect Switches

If the user selectable main power source is interrupted or, if a phase loss or imbalance occurs, the automatic transfer switching circuitry immediately transfers operation of the precision A/C system to a secondary power source. If power is transferred, the system controller provides an alarm signal and the alarm display indicates which power source failed. When the primary power source is functionally restored, the operation of the A/C system is automatically transferred back to the primary power source.

1.6.5.1 Indicator Lights

As an additional option, an indicator light may be provided above each main power service disconnect switch (see Figure 3). A light illuminates above the switch that's selected to supply power to the A/C system, whether the unit is running or not, indicating that power is available at the switch.

1.6.5.2 Preferred Power Selector Switch

A preferred power selector switch (Figure 4) may be included with the auto-transfer switching option. It is mounted inside the cabinet at the top of the electric box (see Figure 14). This switch may be used to manually transfer the power source and/or test the auto transfer switching function.

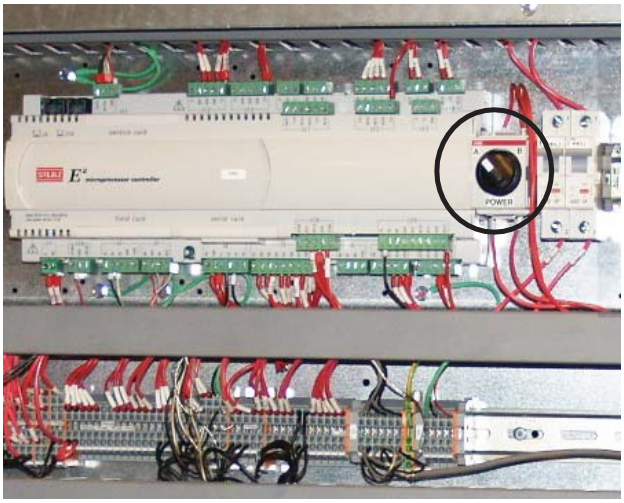

Figure 4- Preferred Power Selector Switch

1.6.5.3 Constant Contact UPS Module

A Preferred Power Selector Switch is not provided if your unit is equipped with a STULZ Constant Contact UPS module. The switching of power sources may be accomplished using the system controller instead.

The Constant Contact UPS module provides short term power for the system controller should there be an interruption to the main power source. Constant Contact allows time for the secondary power source to come on line. If main power is lost, The Constant Contact module provides 32 VDC control power to the E^2 controller to monitor sensor input signals and maintain communications with a BMS for up to one minute.

2.0 INSTALLATION

2.1 Receiving the Equipment

Your CyberAiR system has been inspected and tested prior to shipment. To ensure your equipment has been received in excellent condition, immediately inspect the unit for damage which may have occurred during shipment. If any is found, report it to the carrier immediately. Any obvious damage incurred during shipping must be noted on the freight carrier's delivery forms BEFORE signing for the equipment. Freight claims must be done through the freight carrier. Generally, all equipment ships "FOB Factory". STULZ can assist in the claim filing process with the freight company. Refer to section five of this manual for instructions.

Carefully remove the shipping cover. Remove/open the access panels, remove any loose parts, and check the equipment against the packing list to see if the shipment is complete. Report all discrepancies to the appropriate authority. Inspect the interior of the unit for any signs of transit-incurred damage. Should any damage be present, notify STULZ Product Support prior to attempting any repairs.

A Data Package has been sent with your unit. It contains this manual, a supplemental microprocessor controller manual, system drawings, applicable MSDS's, warranty registration form and other component manuals and applicable instructions based on the configuration and options included with your unit. The data package has been placed in your unit inside a clear plastic bag. These documents should be retained with the unit for future reference.

NOTE

Items that have been shipped loose, such as controllers, temperature/humidity sensors, water detectors, etc., are shipped inside the air conditioner unless specified otherwise by the customer. The plenum box (if applicable) is shipped separately. Unpack and store these items in a safe place unless you are using them immediately.

2.2 Site Preparation

CyberAiR systems are designed with easy service access in mind. Removable, hinged access doors are located on the front of the cabinet. The number of doors vary depending on size and configuration of the unit. Each unit has a door for accessing the electrical box. In order to have full service access through the front of the unit, no permanent obstructions should be placed in front of the cabinet. See Figure 5 for the minimum recommended installation clearance in front of the unit.

NOTE

Working clearance requirements need to be established prior to mounting the unit. Refer to local and national electrical codes.

When determining the installation location consider how you'll route the piping and wiring into the cabinet. The installation drawing furnished with your unit shows the recommended entry locations. Ensure access is available for routing the piping and wiring if entering through the side of the cabinet (see Section 2.7.1). The cabinet may be positioned in a corner and if necessary, a service opening may be cut into the wall for access to install the piping and wiring from an adjoining room.

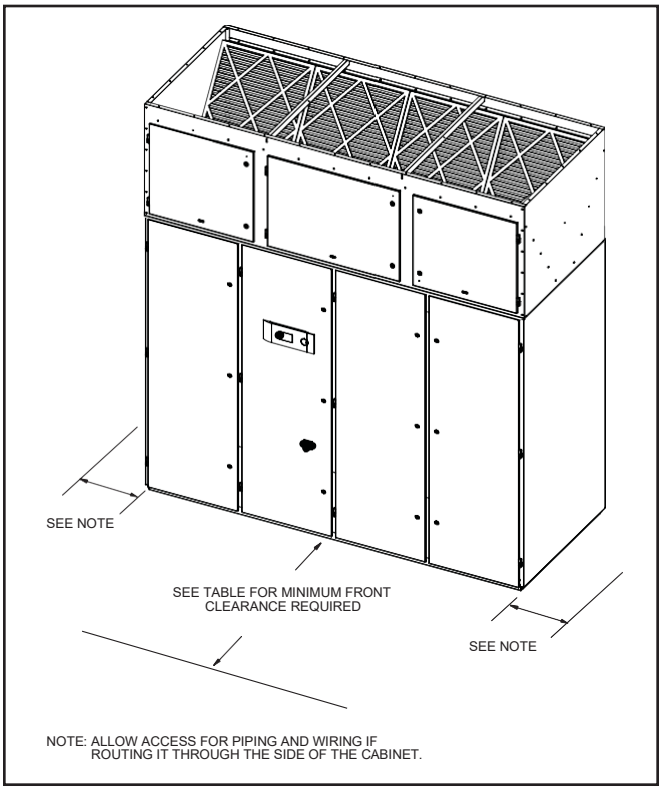

Figure 5- Recommended Installation Clearance

Front Clearance Requirements

CFD/CFU Model	Front Clearance
060 to 400	36"
510 to 730	60"

CAUTION ⚠

The A/C unit must be installed in a space that will be air conditioned.

2.2.1 Conditioned Space

Certain steps may be taken to minimize the effects of the environment surrounding the conditioned space. This is especially true for critical/precision room preparation (computer rooms/labs) requiring close tolerance control of temperature and humidity. The conditioned space should be well insulated and include a vapor barrier. The installer should ensure that the proper insulation rating is used based on the design of the space, which was the basis for the system selected. The following chart is a recommended minimum R-value (thermal resistance to ensure optimum equipment operation.

Structure	R-Value
Ceiling	R-38
Wall	R-21
Floor	R-19
Door	R-5

The vapor barrier is the single most important requirement for maintaining environmental control in the conditioned space. The vapor barrier in the ceiling and walls can be a polyethylene film. Concrete walls and floors should be painted with a rubber or plastic based paint. Doors and windows should be properly sealed and a door sweep used to minimize leakage. Outside or fresh air should be kept to a minimum (as it adds to the cooling, heating, dehumidification and humidifying loads), while still maintaining the requirement of the Indoor Air Quality (IAQ) standard. Lack of attention to these factors can cause erratic operation, unstable room control and excessive maintenance costs.

2.3 Rigging

CyberAiR systems are designed to be kept in a vertical position. Move the unit with a suitable device such as a forklift, pallet jack, or roller bar and dollies. A weight table is provided on the installation drawing. The unit is shipped on a skid to facilitate moving prior to installation. The unit should always be stored indoors in a dry location prior to installation.

CAUTION ⚠

When moving the unit, it must be kept level and in the vertical position when lifting to prevent damage.

2.3.1 Rigging Large (Model 510 to 730) Cabinets

Larger cabinets, such as models CFD-510, CFD-630 and CFD-730, are shipped on a specially designed, oversized skid with forklift slots. In order to safely move the cabinet from the front, utilize a pallet jack or forklift with adjustable width blades and extended tangs. The tangs must be at least 70” long and no more than 8” wide. The tangs must be set apart at 66“ center-to center spacing. DO NOT LIFT THE CABINET FROM THE REAR.

If lifting the cabinet from the side, use a pallet jack. The tangs must be 144” long minimum and no more than 12” wide. The tangs must be set apart at 18“ center-to center spacing.

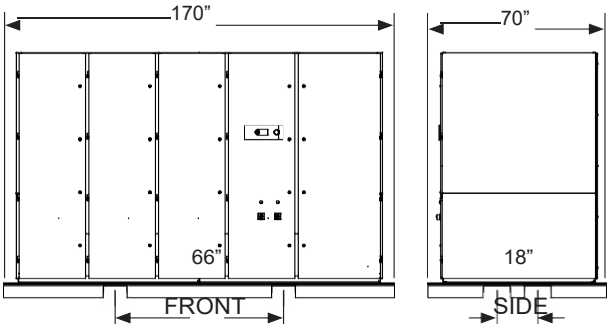

2.4 Mounting/Placement

CyberAiR systems use a frame and panel construction for unit rigidity. The cabinet design allows full service accessibility without moving the unit. CyberAiR systems that are not ducted are designed to be located in the space to be conditioned. Ducted units may be located inside or outside the conditioned space, but are designed to supply air to only one room. CyberAiR systems are front accessible, which allows the unit to be placed in a corner or between cabinetry. It is recommended that the unit is positioned to obtain optimum air circulation.

NOTE

Placement of the floor or ceiling registers is important. If they are too close to the unit, the supply air will be recirculated back to the unit before it has circulated throughout the space.

See Figures 6 & 7. The CyberAiR unit is designed to be located directly on top of the floor (typically upflow) or on a raised floor (typically downflow).

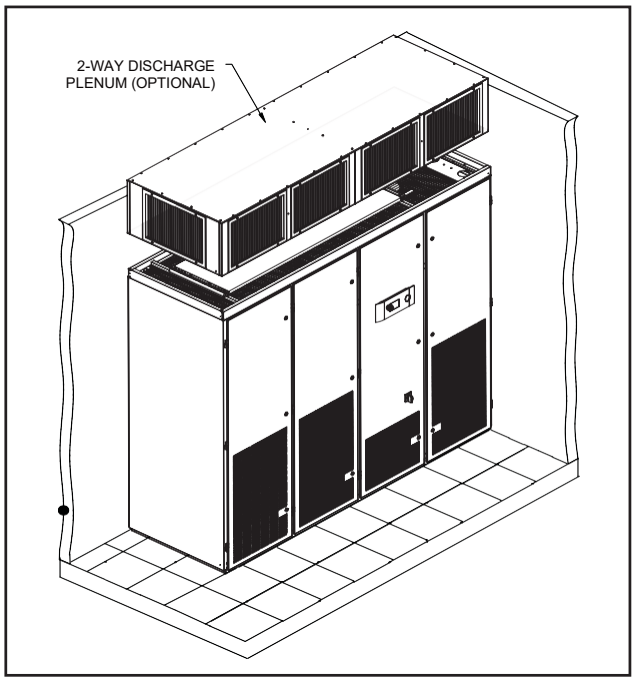

Figure 6- Typical CFU (Upflow) Installation

NOTE

The equipment must be level to operate properly.

CAUTION ⚠

Ensure the mounting surface is capable of supporting the equipment. Before mounting the unit, refer to the weight table provided on the installation drawing. On some raised floor installations a floor stand is required (see Figure 7) depending on the load capacity of the existing raised floor.

If a floor stand is selected (for downflow units), see Section 2.6.1 and refer to the installation drawing provided. Cut out an opening in the raised floor slightly larger than the cabinet's overall base dimension so the A/C unit is supported by the stand. If a floor stand is not selected, use the installation drawing and only cut out an opening in the raised floor to match the discharge opening for the blowers and cut out the holes required for installing piping and wiring through the raised floor.

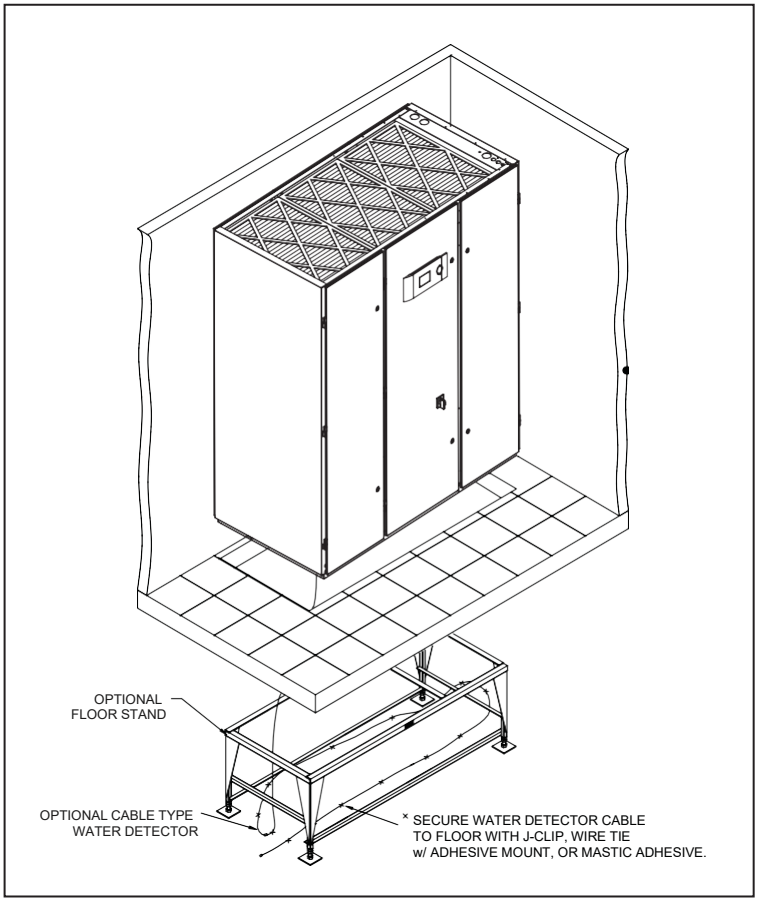

Figure 7- Typical CFD (Downflow) Installation

2.5 Air Distribution Connection

2.5.1 Upflow Configuration Air Patterns

In an upflow configured unit, the conditioned supply air has two methods of discharge: ducted or through a 2 or 3-way grilled plenum box (see Figure 8). The standard return air pattern is front free return. As an option, upflow cabinets are available with rear ducted return.

The supply air outlet is provided with a flange for connecting ductwork (refer to the installation drawing provided with the unit). The connection of ductwork to the unit may be made with either pop rivets or self-tapping screws. If ductwork is to be used, always consult your state and local codes when determining ducting requirements. The duct system should be designed to allow the air to move with as little resistance as possible.

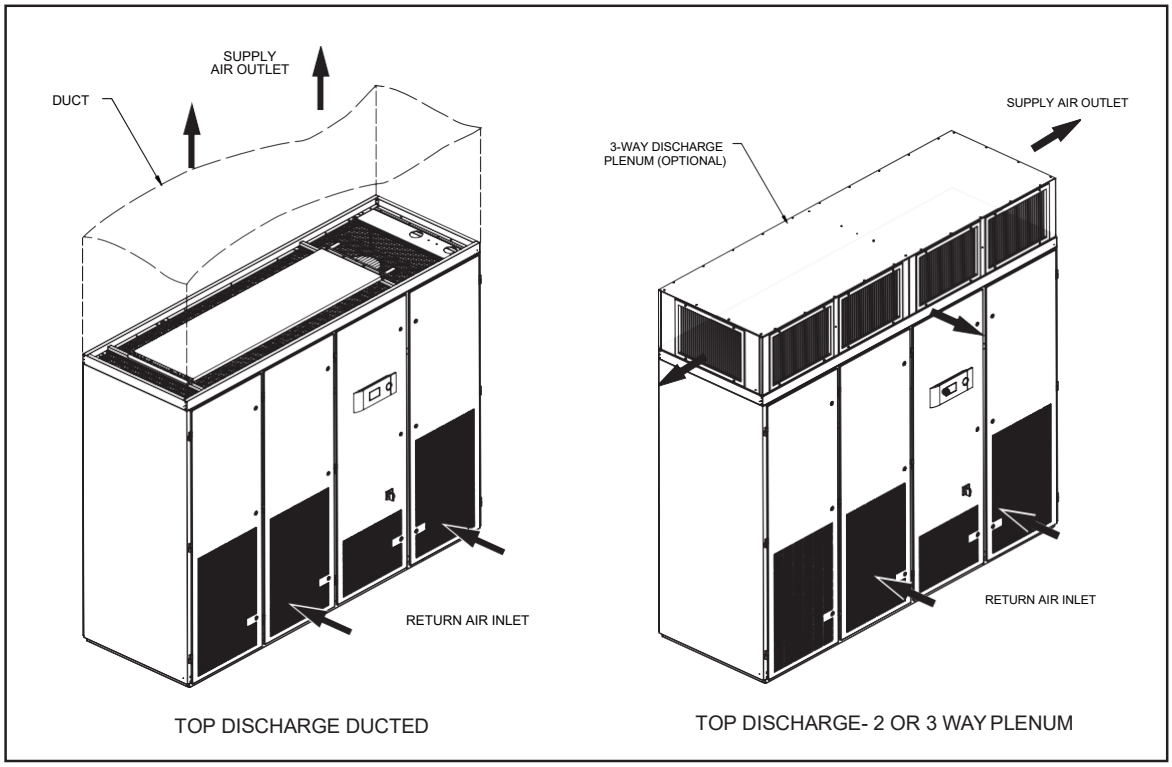

Figure 8- Upflow Configuration Air Patterns

2.5.2 Downflow Configuration Air Patterns

In a downflow configured unit, the conditioned supply air discharges through the bottom of the unit into a raised floor or as an option, through the front and/or rear of the cabinet. There are two basic return air distribution methods: top free return and top ducted return. (See Figure 9).

The return air inlet is provided with a turned in flange on top of the unit for connection of ductwork (refer to the installation drawing provided with the unit). The connection of ductwork to the unit may be made with either pop rivets or self-tapping screws.

If ductwork is to be installed, always consult your state and local codes when determining ducting requirements. The duct system should be designed to allow the air to move with as little resistance as possible.

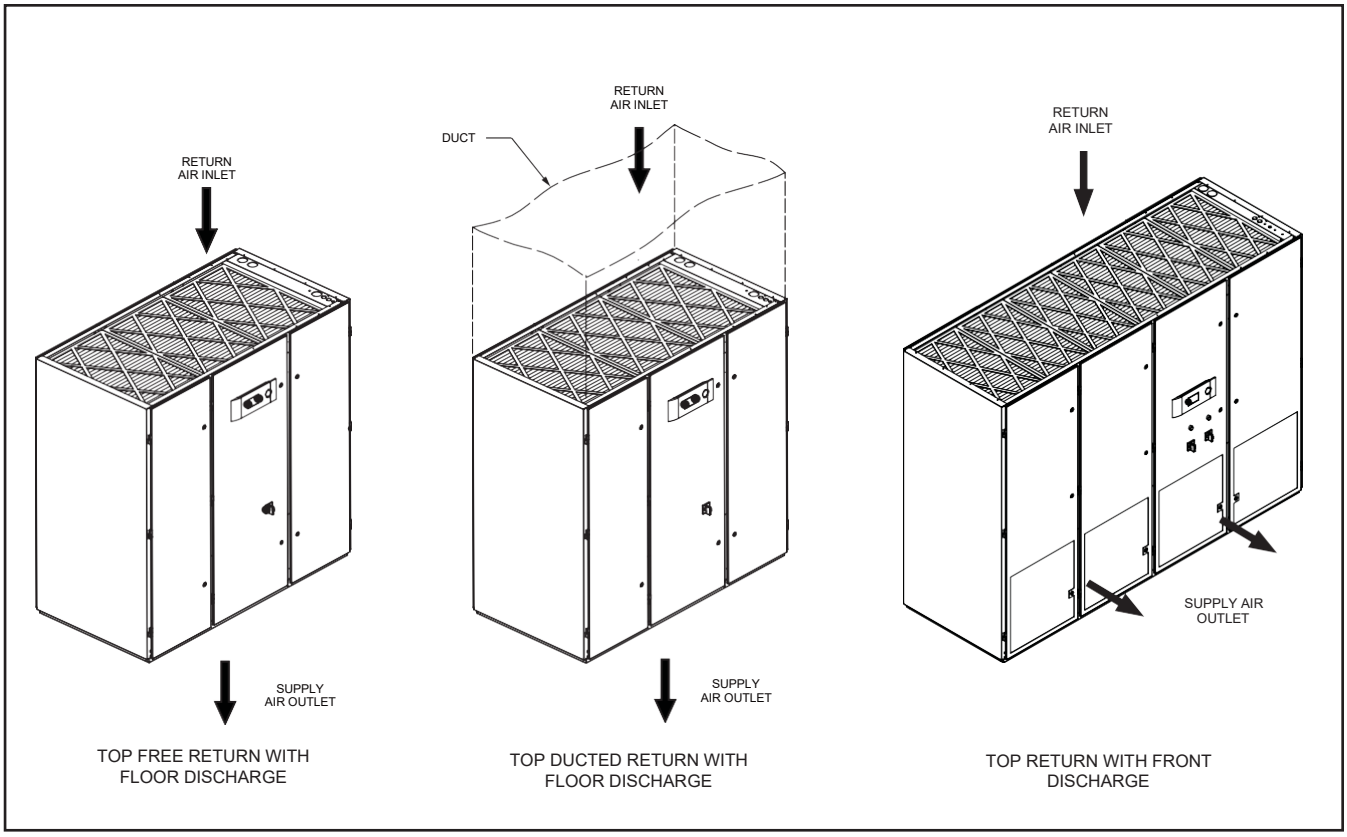

Figure 9- Downflow Configuration Air Patterns

2.6 Optional Equipment (Field Installed)

NOTE

Do not mount any optional equipment on the unit access doors.

2.6.1 Floor Stands

Install the optional floor stand directly on the sub-floor, ensuring the side with the “FRONT” label is facing the same direction as the front of the precision A/C unit. Refer to the floor stand assembly drawing for the dimensions required to cut the raised floor. The floor stand is designed with adjustable legs, allowing for leveling and overall height adjustment. Refer to the floor stand assembly drawing for minimum and maximum height adjustments.

Adjust the height of the floor stand as described in the sections below. Once it is level and even with the raised floor, lock all the feet in place. Place the A/C unit on top of the stand.

2.6.1.1 Floor Stand Height Adjustment

Standard and Low Seismic Floor Stands:

To adjust the height of standard and low seismic floor stands, first loosen the middle hex nut on each leg. Turn the top hex nut to raise or lower the floor stand. Lock the height by tightening the middle hex nut up against the top hex nut.

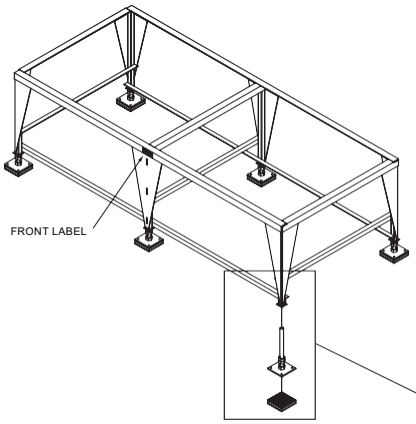

Standard Floor Stand

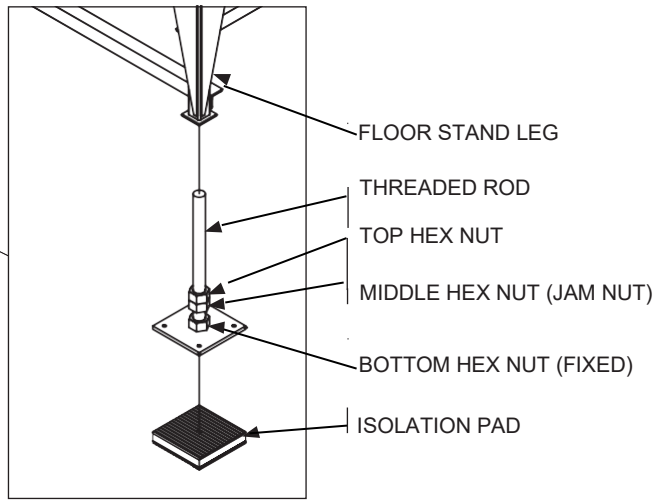

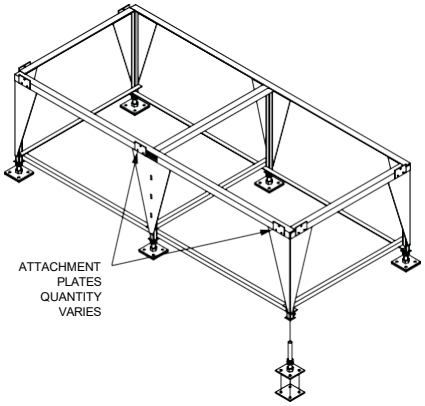

Low Seismic Floor Stand

High Seismic 4 - 10” Nominal Floor Stands:

To adjust the height of a high seismic floor stand, first loosen the top hex nut on each leg. Turn the entire foot weldment to raise or lower the floor stand. Lock the height in place by tightening the top hex nut up against the fixed hex nut in the floor stand leg.

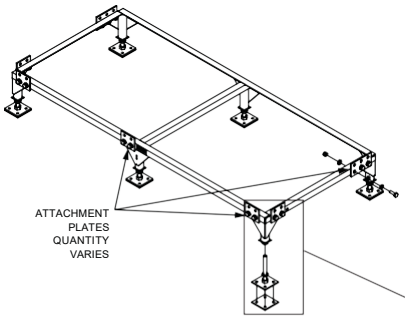

High Seismic Floor Stand
4 - 10” Nominal

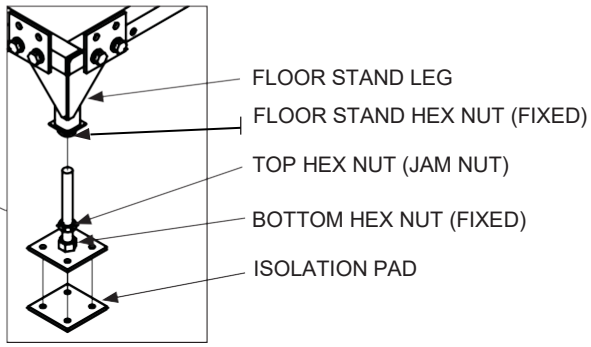

High Seismic 12” and Taller Floor Stands:

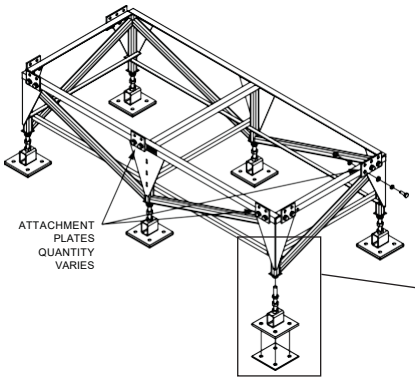

High Seismic Floor Stand
12” and Taller

To adjust the height of a high seismic floor stand, first loosen the top hex nut and bottom hex nut on each leg. Next, turn the middle hex nut to raise or lower the floor stand. Lock the height in place by tightening the top hex nut up against fixed hex nut in the floor stand leg.

2.6.1.2 Seismic Floor Stand Attachment Plates

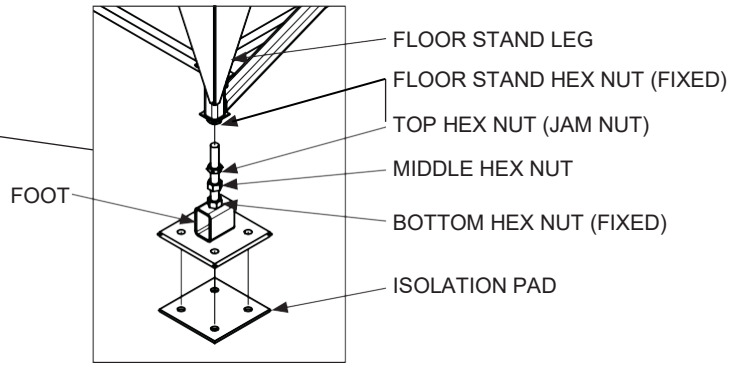

Attachment plates are provided with seismic floor stands to secure the A/C unit to the stand. Refer to the floor stand assembly drawing provided with your unit. Once the A/C unit is in place on top of the floor stand, mount the attachment plates to the stand. The plates for low seismic floor stands are to be attached with 1/4” sheet metal screws. Drill the sheet metal screws into the floor stand through the lower holes in the attachment plate and into the base of the A/C unit through the upper holes in the plate. Ensure all the screws are tightened. Take care not to strip the threads.

For high seismic stands, attach the plates to the stand with 1/2” bolts as shown in the floor stand assembly drawing. Drill holes for the fasteners into the base of the A/C cabinet through the upper holes in the plate. Secure the A/C unit to the floor stand (fasteners to be customer furnished). Ensure all the fasteners are tightened.

2.6.2 Plenum Box

If an optional plenum box (plenum extension box or 2 - 3 way air distribution plenum box) is selected it is typically shipped loose. To install a plenum box, first apply a strip of sealing foam around the top flange of the A/C unit or, run a bead of silicone sealant. Place the plenum assembly on top of the unit (see Figure 10). Attach the plenum with the self-tapping screws provided. Holes are pre-drilled in the plenum box.
If mounting a 2 - 3 way air discharge plenum box (shown in Figure 8), the front grille may be removed for access to the mounting holes.

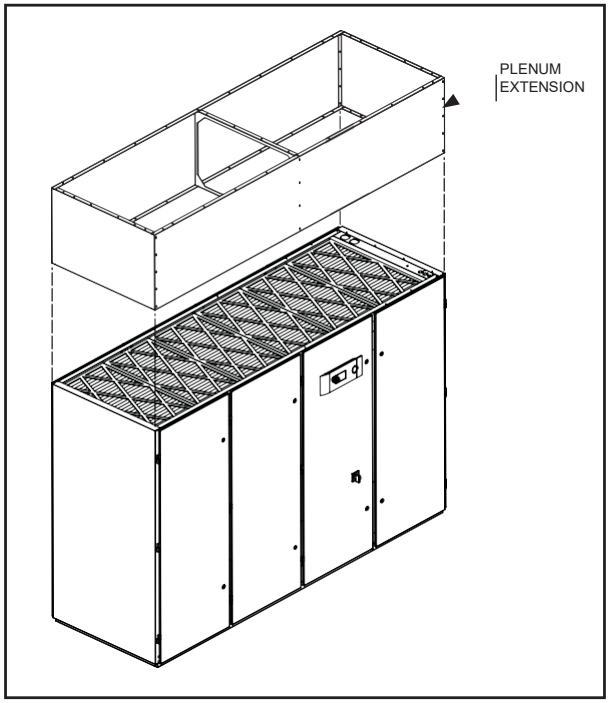

Figure 10- Plenum Installation

2.6.3 Condensate Pump

An optional, factory installed condensate pump may be provided for automatically eliminating condensate and humidifier flush water from the drain pan. The condensate pump is typically installed by the factory inside the A/C unit. If an optional, field installed condensate pump is selected, it should be located as near as possible to the air conditioning system. The pump should be positioned so the inlet hole in the pump is below the drain pan inside the A/C unit. Secure the pump in place with a mounting clamp or use an adhesive that's appropriate for the mounting surface. Ensure that the pump is level for proper operation.

See Section 2.7.2.2 for information on piping the condensate pump.

2.6.4 Remote Temperature/Humidity Sensor

The remote temperature/humidity (T/H) sensor must be located so that it will properly sense the temperature/humidity conditions to be controlled. Depending on the type of control selected (see Section 2.6.4.1), the sensor may be factory mounted or shipped loose for field installation. The T/H sensor should not be mounted near a doorway or an area where it would be exposed to direct sunlight. When locating the sensor, consider the length of wire to be used. As an option, a 75 foot or 150 foot long cable may be provided by STULZ. Follow the steps below to mount the sensor.

Temperature /Humidity Sensor

1. Remove the cover from the base of the sensor by squeezing it at the top and bottom.

CAUTION ⚠

Take care not to damage the exposed temperature/humidity sensors on the PC board when the cover is removed. The sensors can be damaged if handled improperly.

2. Place the base temporarily against the mounting surface.
3. Level the base. Mark and drill mounting holes through at least two of the available slotted holes.
4. Run a 3 conductor shielded cable through the opening in the base, then secure the base with screws ensuring the word TOP on the PC board is oriented upward.
5. Make the wiring connections. Refer to Section 2.8, Utility Connections and refer to the wiring diagram supplied with your unit.
6. Seal the hole in the wall behind the sensor.
7. Replace the cover plate on the base.

CAUTION ⚠

The sensor can be damaged if handled improperly. Take care not to damage the exposed temperature/humidity sensor on the PC board. Do not touch the sensor as this will affect its accuracy.

2.6.4.1 Types of control

Room Air Control (standard)- The A/C unit is provided with a temperature and humidity (T/H) sensor, factory mounted in the return air stream of the A/C unit. The return air temperature and humidity are monitored by the system controller and compared to limit values set at the factory. Control outputs are based on set points entered into the system controller by the user.

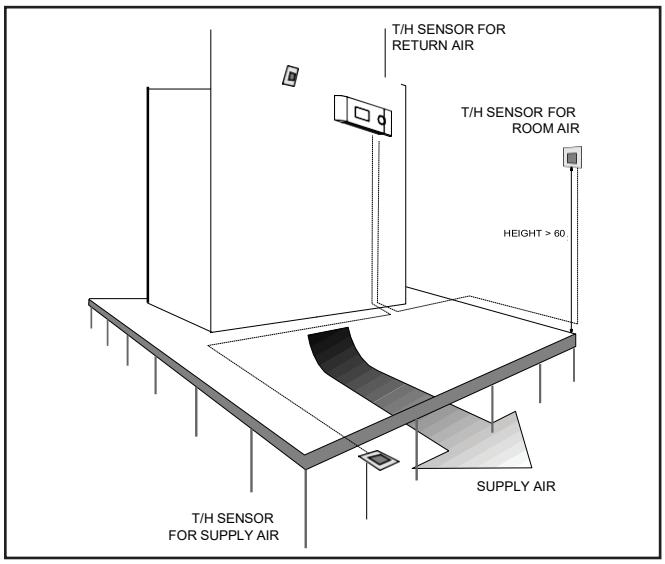

Figure 11- Temperature/Humidity Sensor Location

As an alternative to locating the T/H sensor inside the A/C unit, it may be field installed under a raised floor for sensing supply air conditions or, on a wall in the conditioned space for sensing actual room conditions.

Supply Air Control- As an option, a field installed T/H sensor may be used for supply air control. The sensor is field installed in the supply air stream. The supply air temperature and humidity are monitored

by the system controller and compared to limit values set at the factory. Control outputs are based on set points entered into the system controller by the user.

2.6.5 Remote Water Detector

The remote water detector is normally placed on the sub-floor or in a field supplied auxiliary drain pan located beneath the unit. STULZ provides 2 types of water detectors:

Spot type water detector-

Remove the protective cover and connect two control wires to the terminals on the base. Run the control wires into the electric box and connect them to the control terminal block as shown in the wiring diagram provided with your unit. Replace the cover and place the water detector(s) on the floor with the metal electrodes facing down. When water is present, current will flow between the electrodes. The base is provided with a mounting hole in the center which may be used to secure the water detector in place.

NOTE

Do not place the spot type water detector on an electrically conductive surface.

Cable type water detector-

Lay the cable water detector flat across the sub-floor where water could collect (see Figure 7). Secure the cable every 12-18 inches with J-clips or cable ties with adhesive mounting pads when installing it in the airstream. When routing it around obstructions, secure it at each turn of the cable. Do not tie the water detector cable to the metal floor stand or to metal pipes.

When a water leak on the floor reaches the cable, current will flow between the cable wires. A two conductor wire harness is provided with a quick connect fitting on the end. The harness mates to the fitting on the water detector and connects it to the control terminal block inside the electric box as shown in the wiring diagram provided with your unit (see Figure 14).

2.7 Piping Connections

2.7.1 Chilled Water/Hot Water

Pipe connections for the chilled water and optional hot water reheat piping are sweat connections. In most cases, they terminate inside the cabinet except upflow units which are provided with pipe connections protruding through the top of the cabinet.

CFU (upflow) units typically have piping stubbed out at the top of the cabinet. When considering how to route the piping and wiring for CFU units furnished without top piping, entry holes may be drilled through either the floor of the cabinet or through a side panel. The STULZ installation drawing (furnished with your unit) shows the recommended entry location. For special piping requirements contact STULZ for technical assistance.

CFD (downflow) units typically have pilot holes available for routing wiring into the electric box. Refer to the installation drawing provided with your unit for the location of the openings.

If piping is brought into the side of the cabinet, ensure adequate working space is available on that side or if necessary, cut a service opening into the adjacent wall if the unit is installed in a corner. After the piping is installed, seal the gaps between the pipes and the cabinet entrance holes so air won't leak around the pipes.

For pipe connection sizes, see the installation drawing provided with your unit. Field piping is not necessarily the same size as the units pipe connections. Piping should be sized to match the system pressure drop and flow capacity and may require reducing fittings to match the connection size on the air conditioner. An air vent and several Schrader valves are installed in the precision A/C unit piping. Refer to the piping diagram supplied with your unit. Provide manual shut-off valves in both the supply and return lines for servicing the unit and for emergency isolation.

NOTE

A 20 mesh stainless steel strainer (opening size = 865 microns) is recommended to be installed in the supply line. The strainer screen should be cleaned periodically

CAUTION ⚠

Chilled water cooling coils and associated piping circuits are **pressurized (up to 100 psi)** and sealed when the unit leaves the factory. Before installing the interconnecting piping, release the pressure via an available stem valve or Schrader valve prior to uncapping the pipes.

If newly installed CW supply and return piping is used, it is recommended that the piping system be cleaned prior to connecting it to the unit. **If solvents/ cleaning solutions are used, ensure they are completely flushed from the piping before connecting it.** Failure to do so could result in equipment problems.

CAUTION ⚠

When installing and filling chilled water and optional hot water reheat loops, all air must be bled from the piping system.

NOTE

Chilled water lines should be insulated to prevent condensation from forming on the pipes.

2.7.2 Condensate Drain

2.7.2.1 Gravity Drain

A drain line is installed to drain the condensate pan. If an optional humidifier is used, the drain line from the humidifier is typically connected to the condensate drain line. The end of the drain line is clamped inside the cabinet. The installer must install a customer supplied drain hose to the end of the drain line to remove water from the cabinet. See the installation drawing provided with your unit for the size and location of the condensate drain line.

NOTE

In most cases the humidifier drains (hot) water into the condensate drain during normal operation. As an option, a separate drain line may be provided for the humidifier.

The drain line must be located so it will not be exposed to freezing temperatures. The diameter of the drain line should be the full size of the connection.

NOTE

Pour some water into the condensate drain pan prior to start-up. This fills the trap and prevents air from being drawn up the drain lines.

WARNING ⚠

Do not use chloride based water conditioning additives in condensate drain pans. This will cause corrosion to occur on the coil fins.

2.7.2.2 Condensate Pump

An optional condensate pump is normally factory installed. The drain connection is typically a 1/2” copper tube. See the installation drawing provided with your unit for the location of the pump and for the size of the drain connection.

If an optional field installed condensate pump is used, a p-trap must be installed to allow proper condensate drainage (see Figure 12). The height of the trap must be a minimum of 2 inches on standard systems to ensure proper water drainage. The condensate pump discharge line should be 1/2 inch O.D. (maximum) copper pipe to prevent excessive back flow to the condensate pump.

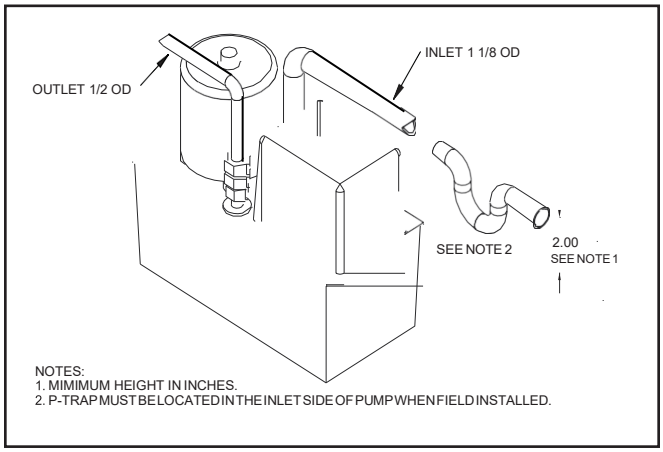

Figure 12- Condensate Pump

2.7.3 Humidifier

CyberAiR systems utilize an electrode steam humidifier. In most cases the humidifier empties into the condensate drain line during the flush/drain cycle. As an option, the drain for the humidifier may have a separate connection. Refer to the installation drawing provided with your unit for the size and location of the connection.

A water supply line for the humidifier must be connected to the end of the copper tubing provided

by the factory. Refer to the installation drawing provided with your unit for the size and location of the connection. The humidifier requires normal tap water for the water supply. If the supply water is high in particulate, an external filter may be needed.

CAUTION ⚠

Do not use de-mineralized water.

Refer to the humidifier operator's manual, supplied with the equipment, for complete manufacturer's information on the humidifier and the supply water recommendations.

2.8 Utility Connections

2.8.1 Main Power

It is important that the unit nameplate be examined to determine the operating voltage, frequency and phase of the system (see Figure 13). The nameplate also provides the full load amps (FLA), the current the unit will draw under full design load, the minimum circuit ampacity (MCA) for wire sizing, and the maximum fuse or HACR (Heating, Air Conditioning, Refrigeration) breaker size (MAX FUSE/CKT BKR) for circuit protection. The unit's nameplate is located inside the cabinet, within the electrical box.

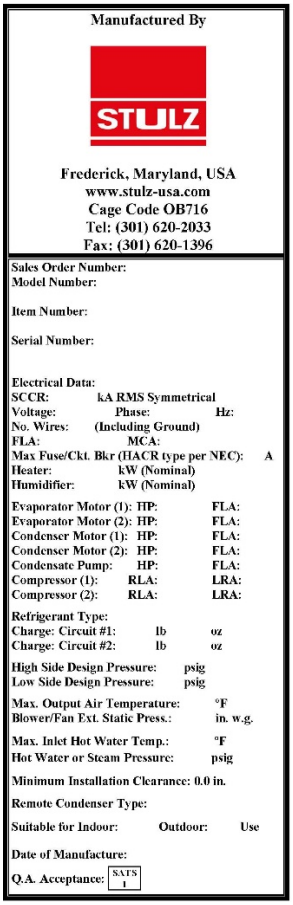
Manufactured By

STULZ

Frederick, Maryland, USA
www.stulz-usa.com
Cage Code OB716
Tel: (301) 620-2033
Fax: (301) 620-1396

Sales Order Number:
Model Number:

Item Number:

Serial Number:

Electrical Data:
SCCR: kA RMS Symmetrical
Voltage: Phase: Hz:
No. Wires: (Including Ground)
FLA: MCA:
Max Fuse/Ckt. Bkr (HACR type per NEC): A
Heater: kW (Nominal)
Humidifier: kW (Nominal)

Evaporator Motor (1): HP: FLA:
Evaporator Motor (2): HP: FLA:
Condenser Motor (1): HP: FLA:
Condenser Motor (2): HP: FLA:
Condensate Pump: HP: FLA:
Compressor (1): RLA: LRA:
Compressor (2): RLA: LRA:

Refrigerant Type:
Charge: Circuit #1: lb oz
Charge: Circuit #2: lb oz

High Side Design Pressure: psig
Low Side Design Pressure: psig

Max. Output Air Temperature: °F
Blower/Fan Ext. Static Press.: in. w.g.

Max. Inlet Hot Water Temp.: °F
Hot Water or Steam Pressure: psig

Minimum Installation Clearance: 0.0 in.

Remote Condenser Type:

Suitable for Indoor: Outdoor: Use

Date of Manufacture:

Q.A. Acceptance: SATS 1

Figure 13- Sample Nameplate

NOTE

If the nameplate states MAX FUSE/CKT BKR, it is required to use fuses or a HACR type circuit breaker to protect the system. Other protection devices are not allowed based upon the product listing.

The unit is provided with terminals for all required field-wiring. Refer to the electrical schematic supplied with the unit when making the power and control field-wiring connections. It is important to identify the options that were purchased with the unit in order to confirm which field connections are required.

WARNING ⚡

Verify power is turned off before making connections to the equipment.

NOTE

All wiring must conform to local and national electrical code requirements. Use of copper conductors only is required. Wiring terminations may become loose during transit of the equipment; therefore, it is required to verify that all wiring terminations are secure.

CAUTION ⚡

Improper wire connections may result in damage to the unit.

It is important to verify that the main power supply coincides with the voltage, phase and frequency information specified on the system nameplate. The supply voltage measured at the unit must be within ±10% of the voltage specified on the system nameplate.

Downflow units are provided with pilot holes in the floor of the cabinet for the entry of the main power and control field-wiring. If necessary, these holes may be enlarged to properly fit the connector. A label stating "MAIN POWER INPUT" is in close proximity. As an option, piping may be provided stubbed out of the top of the cabinet.

For upflow units with top piping, pilot holes for entry of power and control wiring are located in the top of the cabinet. For upflow units without top piping, pilot entrance holes are provided in the cabinet floor or may be field drilled into a side wall if necessary. See the installation drawing provided with your unit for recommended entrance hole sizes and locations.

Route the main power wires into the electric box and terminate the wires at the line side of the main power disconnect switch as shown in the electrical drawing. A separate equipment ground lug is provided within the electrical box for termination of the earth ground wire.

CAUTION

Prior to unit operation, an adequate unit-to-earth ground must be connected to the unit.

2.8.1.1 Optional Dual Power

Route the primary and alternate power source wires to the disconnect switches in the electric box. Terminate the primary power source to switch A and the alternate power source to switch B as shown in the electrical drawing. Leave both switches in the ON position during normal operation. The system will operate with power source A unless a switchover (auto or manual) occurs. See Section 1.6.5.

The size of the electric box and location of components vary according to the CyberAiR model and options selected. Figure 14 shows a sample electric box layout (with dual power option) and identifies the major components.

The numbered call-outs in Figure 14 coincide with the numbered items listed below:

1. Microprocessor Controller I/O Module
2. Preferred Power Selector Switch (Optional)
3. Control Interface Terminals
4. Circuit Breakers
5. Contactors for Dual Power (Optional)
6. Main Power Disconnect Switch
7. Alternate Power Disconnect Switch (Optional)
8. Ground Lug
9. Motor Starter Protectors (Quantity Varies)

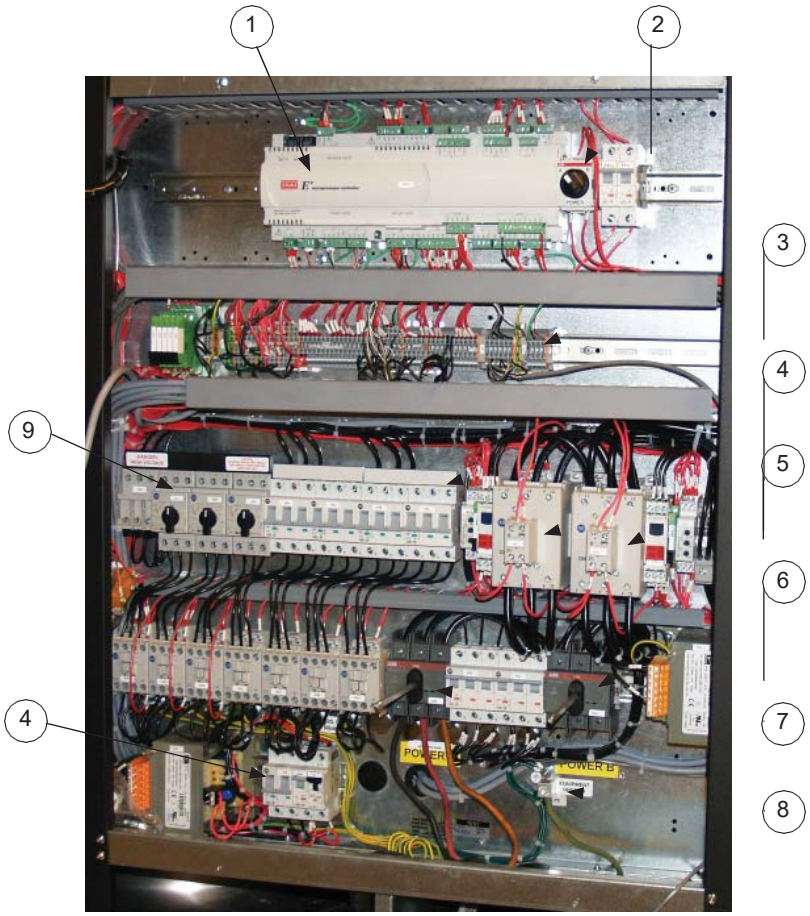

Figure 14- Electric Box

2.8.2 Controls

STULZ offers a wide range of control features to solve your air conditioning control/alarm requirements. The CyberAiR system is furnished with an E^2 microprocessor controller (Controller I/O module) with a user interface display panel mounted to the front door of the cabinet. Refer to the electrical drawing provided for details on all interconnecting field wiring.

2.8.3 Optional Equipment

Additional control conductors may be required depending on the options purchased with the equipment. Refer to the electrical diagram supplied with your unit to determine the total number of interconnecting conductors required for your system. It is important to note that control transformer(s) supplied with the equipment are sized and selected based upon the expected loads for each system.

CAUTION ⚠

Do not connect any additional loads to the factory supplied control transformers. Connecting additional loads to a control transformer may result in overloading of the transformer.

2.8.3.1 Remote Temperature/Humidity Sensor

Field installed remote temperature/humidity sensors require a three conductor shielded cable, with the shield terminated at the unit electric box. Both the electric box and the sensor are provided with a terminal strip for the wire connections. Refer to the electrical schematic supplied with your unit for proper wire terminations.

2.8.3.2 Remote Water Detector

Each remote water detector requires two conductors to be wired to the control terminal board within the unit electrical box (see Figure 14). If customer furnished, the wire insulation must be rated at 600V. Refer to the electrical schematic supplied with your unit for proper wire terminations.

2.9 System Settings and Adjustments

2.9.1 Chilled Water Circuit

In a chilled water A/C unit, cooling is maintained by the flow of chilled water through a cooling coil. A water valve proportionally opens to increase the flow as the temperature rises (or closes as the temperature falls). If the unit is turned off using the normal shut down procedure with the system controller, the valve will return to the closed position shutting off flow through the coil. Chilled Water control valves are available in 2-way or 3-way configurations. Refer to the piping drawing supplied with your unit to determine which type valve is provided.

Location and size of chilled water valves differs with the size of the A/C unit. The chilled water valves are factory set for the correct operating position and should not require field adjustment.

2.9.2 EC Fan(s)

The speed of the EC fans is controlled via a signal from the system controller. The signal is either 0 - 10 VDC or modbus depending on system configuration. The controller is set by the factory and should not require adjustment. If it is determined that the air flow needs adjustment, this may be done using the controller's programming menu selections. Refer to the IOM manual provided under separate cover for the system controller. It is recommended that STULZ Product Support be contacted before making adjustments to the controller.

2.9.3 Humidifier Adjustment

The humidifier has an adjustable capacity potentiometer on the humidifier control circuit board. The potentiometer may need to be field adjusted if the humidifier is not supplying enough capacity for current room conditions.

It is recommended that if the humidifier capacity potentiometer requires adjustment, the adjustment is made in small increments and verified. Refer to the humidifier manual sent under separate cover with your unit for the location of the capacity adjustment potentiometer.

CAUTION ⚠

Adjusting the capacity potentiometer too high may result in the formation of condensation within the system.

3.0 START-UP/COMMISSIONING

3.1 Operation

For new installations, ensure the unit is ready to operate by going through the Checklist for Completed Installation, located in Appendix A, prior to start-up.

NOTE

A Warranty Registration and Start-Up Checklist is provided with the unit data package. It should be completed during start-up and sent to STULZ. This checklist should be used as a guideline for items that need to be confirmed during start-up.

Start-up must be performed by a journeyman, refrigeration mechanic or an air conditioning technician.

3.2 Step-by-Step Start-Up Instructions

1. Ensure that the control circuit breakers, fan power switch (motor starter protectors) and additional built in optional equipment power switches are turned on.
2. Close all cabinet doors and replace all equipment removed prior to performing start-up checks.
3. Apply power to the CyberAiR system at the main power disconnect switch.
4. Turn on the A/C unit using the system controller and set the desired values (set points) for room temperature and humidity. (Refer to the separate controller operating instructions included in the data package with your unit.)
5. Ensure that all fans are rotating correctly and freely without any unusual noise.

WARNING

This unit employs high voltage equipment with rotating components. Exercise extreme care to avoid accidents. Always keep hands, clothing and tools clear of the fan blades when power is On.

6. Test cooling operation by setting the temperature setpoint below actual room temperature. The chilled water valve should open and the fan speed should increase. The discharge air should feel cooler than the return air.
7. Test humidification operation by creating a demand for humidification. Use an amp meter to determine current draw of the humidifier. Visually check for vapor leaving the steam head or feel if the cylinder is warm to verify if the humidifier is operational. In all cases, 1 to 6 hours might be required to see a desired level or rise in humidity in the conditioned space. Once room conditions have been programmed or set, a repeat visit to the conditioned space may be required to ensure the humidifier is meeting the room's requirements.
8. Test dehumidification operation by creating a demand for dehumidification. If necessary, set the dehumidification setpoint 10% below actual room conditions, (the set point may already be below actual room conditions, especially at start-up). The chilled water valve should open to begin the dehumidification process. While in this mode, room temperature may decrease and the reheat function may activate. As conditions in the room change, you may have to readjust the setpoint as you check operation.
9. For Electric Reheat, use an amp meter on the heater circuit to determine if the heater is operational. For Hot Water Reheat ensure that the control signal has energized the hot water control valve and the temperature of the water has decreased as it passes through the unit. In all cases, 1 to 6 hours might be required to see a desired level of humidity in the conditioned space. Once room conditions have been programmed or set, a repeat visit to the conditioned site may be required to ensure the dehumidification mode is meeting the room's requirements.

3.3 Microprocessor Controller Programming

The microprocessor controller is factory programmed based on the optional features selected. Most applications require no field start-up or program adjustment beyond setting the current date and time. Separate operating instructions for the controller have been sent with your unit, including each feature's factory "default" setting and the available adjustment range, if applicable.

4.0 MAINTENANCE

4.1 Periodic General Maintenance

Systematic, periodic general maintenance of the CyberAiR system is recommended for optimum performance. General maintenance should include but is not limited to the following: replacing filters and humidifier cylinders, tightening electrical connections, checking the water lines to ensure they are free of debris, ensuring no air is in the water line(s), cleaning the interior of the unit and inspecting the unit's components visually.

Use copies of the Periodic General Maintenance Checklist in this manual (see Appendix A) to record periodic general maintenance inspections. For assistance, contact STULZ Product Support. Ensure adherence to all safety statements while performing any type of maintenance.

WARNING

This equipment should be serviced and repaired by a journeyman or a qualified refrigeration technician only.

WARNING

This unit employs high voltage equipment with rotating components. Exercise extreme care to avoid accidents and ensure proper operation.

Hazardous voltage will still be present inside the electric box at the motor start protectors and at the heater and humidifier circuit breakers, even with the unit turned off at the microprocessor controller. To isolate the unit for maintenance, turn off power at the main power disconnect switch. Always disconnect main power prior to performing any service or repairs.

WARNING

Turn off power to the unit unless you are performing tests that require power. With power and controls energized, the unit could begin operating at any time. To prevent personal injury, stay clear of rotating components as automatic controls may start them unexpectedly.

4.1.1 CyberAiR Precision A/C Unit

4.1.1.1 Air Filter

The air filter is usually the most neglected item in an air conditioning system. To maintain efficient operation, the filter should be checked at least monthly and replaced as required.

NOTE

Conditions of spaces vary and filters should be checked based on those conditions.

4.1.1.2 Fans

Periodic checks of the EC fan system should include checking the wiring, fan motor mounts, housing and impeller wheel. Ensure all electrical connections are tight. Check that all mounts are secure and the impeller wheel is tightly mounted. The impeller blades should be kept free of debris.

4.1.1.3 Drain Pan

To ensure proper drainage, inspect the drain pan regularly. Make sure the drain pan outlets are always free of debris and ensure the drain pan does not leak.

4.1.1.4 Coils

The coil(s) should be inspected semi annually and cleaned as required following standard coil cleaning practices. Using a brush, clean the coil fins of all debris that will inhibit airflow. This can also be done with compressed air or with a commercial coil cleaner. Check for bent or damaged coil fins and repair as necessary. Check all piping for signs of leaks.

4.1.1.5 Heat/Reheat

The heat/reheat equipment should be inspected semi-annually to ensure it is operational. If you have electric heat/reheat, inspect the heating elements to ensure they are free of debris.

4.1.1.6 Humidifier

The steam cylinder has a limited lifetime and must be replaced periodically. Because water conditions and humidifier usage rates vary greatly, it is difficult to establish intervals for changing the cylinder. Individual maintenance schedules must be determined for each location, based upon periodic examination of the humidifier. A yellow LED on the humidifier cabinet will flash four times in a repeating pattern when the cylinder requires replacement.

NOTE

The yellow LED may illuminate during initial start-up but it doesn't necessarily mean the cylinder needs to be replaced.

Refer to Section 4.3.1.3 and the humidifier operator's manual supplied under separate cover for detailed instructions on changing the cylinder.

4.1.1.7 Condensate Pump

The condensate pump should be inspected semi-annually and cleaned. Ensure that the float works freely. Wipe the float with a wet cloth and detergent to remove debris. Clean the tank bottom. Check that the discharge line is open and water can pass through it freely.

4.2 Troubleshooting

Turn off all power to the unit before conducting any troubleshooting procedures unless the procedure specifically requires the system to operate. For troubleshooting purposes, the system may be operated with the doors open by using channel lock pliers to turn the shaft of the main power disconnect switch to the "On" position. **NOTE: When the switch is turned on, high voltage will be present inside the cabinet.** Exercise caution to prevent injury. Keep hands, clothing and tools clear of the electrical terminals and rotating components. Ensure that your footing is stable at all times.

Symptom	Probable Cause	Recommendation
Chilled Water Valve Fails to Open or Close	a. Temperature setpoint too high	Adjust to correct temperature setting
	b. No control power to the valve	Valve actuator is wired incorrectly. Check wiring schematic and rewire if required.
	c. Actuator failed	Replace actuator
EC Fan(s) Fail to Start	a. Power failure	Check main voltage power source input cable
	b. Motor starter protector tripped	Reset motor starter protector and check amperage of motor. Compare to setting on motor starter protector and adjust to correct FLA.
	c. Control transformer circuit breaker tripped	Check for short circuit or ground fault; if none reset circuit breaker
	d. Condensate overflow switch open	1. Ensure unit is level 2. Check that condensate pan is draining.
	e. No control signal to fan(s)	Check the Control I/O Board for a 0-10 VDC control signal to the fan(s). Refer to the electric drawing to determine the correct I/O board terminal numbers. This must done within 15 seconds of turning the disconnect switch "On" .
	f. EC fan's internal overheat protection interrupted fan motor operation	Determine the cause of the interruption and correct. Possible causes are: 1. Blocked rotor 2. Low supply voltage > 5 seconds 3. Loss of phase > 5 seconds After causes 1, 2, and 3 are corrected, the motor will automatically reset. *(Continued on next page)*

Symptom	Probable Cause	Recommendation
EC Fan(s) Fail to Start (Cont.)		After the causes below are corrected, the fan(s) must be manually reset by turning off power for 20 seconds: 4. Over temperature of electronics 5. Over temperature of motor
Control is Erratic	Wiring improperly connected or broken	Check wiring against schematic diagram
System Short of Capacity	a. Low Chilled Water flow	Check for leaks. Repair and recharge system.
	b. Supply water temperature too high	Check chilled water supply
	c. Reduced airflow	Check filters
	d. Dirty Coil	Clear coil fins of debris
Electric Heater Inoperable	a. Circuit breaker tripped	Check for short circuit; reset circuit breaker.
	b. Temperature setpoint too low	Increase temperature setpoint
	c. Overheat switch open	Insufficient air flow across heater elements. Check for dirty filters or obstructions that may reduce air flow. Correct or replace as needed.
	d. Manual reset overheat safety switch tripped	Reset manual overheat safety switch (see item immediately above).
	e. Heater element burned out	Check continuity with an ohmmeter Replace heater element
	f. Defective contactor	Repair or replace
Hot Water Heater Inoperable	a. Low hot water flow	Check hot water flow at supply source. Inspect piping for leaks or obstructions.
	b. Hot water supply temperature too low	Check hot water supply
	c. Temperature setpoint too low	Increase temperature setpoint
	d. Control power interrupted	Check for loose or broken wires
Humidifier Inoperable Note: *See Humidifier Manual for Additional Help.*	a. Water supply has been turned off or not connected	Connect and/or turn on water supply
	b. Humidifier switch is in “Off” position	Turn switch to “Auto/On” position
	c. Electrical connections are loose	Tighten electrical connections
	d. Humidifier circuit breaker tripped	Check for excess current draw by the humidifier electrodes. Drain water from tank and refill. Reset circuit breaker.
	e. Defective contactor	Repair or replace
	f. Relative humidity is above setpoint	Adjust humidity setpoint
	g. Electrode canister change cylinder light is activated	1. Consult humidifier manual 2. Water conductivity is too low and water is at the top of the cylinder (see next item).
	h. Water conductivity is too low	Add a teaspoon of table salt to the water through the top of the cylinder. Typically only required during initial start-up.

4.3 Field Service

NOTE

Do not attempt to make repairs without the proper tools.

It may be necessary to perform repairs on the A/C system. If field repairs are necessary, the following procedures apply:

1. All electrical connections should be checked to ensure they are tight and properly made.
2. Check all circuit breakers, contacts and wiring. The contactor should be examined and replaced if contacts are worn or pitted.

4.3.1 General Common Repairs/ Component Replacement

4.3.1.1 Cooling System

NOTE

Repairs to refrigeration systems must be performed by a journeyman refrigeration mechanic or air conditioning technician.

If the Chilled Water system isn't cooling or if cooling is reduced, check for leaks in the system. Check for clogged water lines. If filters are installed in the CW lines, check the condition of the filters. Clean or replace the filters if necessary.

4.3.1.2 Leaks

A leak in a chilled water cooling system will usually form a puddle of fluid beneath the unit that can be easily seen. Visually trace the leak up from the puddle to the area on the unit where fluid may be seen dripping.

When a leak is detected, properly reclaim the remaining CW coolant before attempting repairs. Adjacent piping must be thoroughly cleaned by removing all paint, dirt and oily film. Use wire brush, sandcloth or sandpaper and wipe the area with clean, dry cloths. Protect nearby parts from heat damage by wrapping with water-soaked cloths.

For copper-to-copper (piping) repairs use SILFOS Alloy. No flux is required with Silfos Alloy. Silver solder (Stay Silv #45) and flux are to be used on copper-to-brass or copper-to-steel repairs.

When repairs are completed, remove all traces of flux. After any repair, pressurize the system to check for leaks prior to recharging the system.

4.3.1.3 Humidifier Cylinder Replacement

After an extended period of operation, the yellow LED on the humidifier cabinet will repeatedly flash four times indicating that the cylinder is completely used and a replacement cylinder must be installed. The cylinder is disposable and cylinder life is dependent on water supply conditions and humidifier usage. Refer to the humidifier operator's manual supplied under separate cover for detailed instructions on changing the cylinder. The following procedures are to be followed when replacing the cylinder.

CAUTION ⚠

Failure to replace the cylinder at the end of cylinder life may result in humidifier damage.

NOTE

Decrease the humidity setpoint below ambient humidity to allow the cylinder to cool down before removing the cylinder.

1. Turn the A/C unit Off by pressing (and holding) the Enter key on the E^2 controller.
2. Turn off the water supply to the humidifier.
3. Turn the main power disconnect switch(es) Off and open the doors of the A/C unit.
4. Turn the fan motor starter protectors (Q01, Q02, Q03,...) to the Off position.
5. Fashion a jumper wire and install it across the terminals on the airflow switch (F40).

6. Using a pair of vise grips, turn the shaft of the main power switch to the On position to provide power for the humidifier drain solenoid.
7. Drain the cylinder by pushing the "On-Off-Drain" switch to the Drain position.
8. When drained, push the "On-Off-Drain" switch to the Off position.
9. Turn the main power disconnect switch Off to disconnect power from the humidifier and remove the jumper from the airflow switch.

10. The power wires to the cylinder are attached by cylinder plugs to the electrode pins on top of the cylinder. Pull these plugs vertically off the pins.

CAUTION ⚠

The cylinder and steam hose may be hot and burns may result.

11. Loosen the steam hose clamp(s) and pull the steam hose off vertically.
12. Using a flat head screwdriver, press the tab on the cable tie to release it. Lift the cylinder straight up to disengage it from the humidifier.
13. Place the new cylinder on the side mounting slots within the unit, ensuring the cylinder mounting stubs are seated properly.
14. Replace the cylinder plugs on the pins, ensuring the white sensor plug goes on the single pin, which is offset from the others.
15. Ensure the plugs are secured on the pins. If the plugs are loose, they may be temporarily squeezed together, however, the plugs must be replaced since a loose plug could generate enough heat to melt and destroy the plug.
16. Replace the steam hose and tighten the clamp(s).
17. Push the “On-Off-Drain” switch to the On position.
18. Turn the fan motor starter protectors (Q01, Q02, Q03,...) to the On position.
19. Close the A/C unit doors and turn the main power disconnect switch(es) to the On position.
20. Turn on the water supply to the humidifier.
21. Turn the A/C unit On by pressing the Enter key on the ***E²*** controller.
22. Adjust the humidity to the desired setpoint.

If the humidifier is to be shut down for an extended period, always drain the cylinder first. Follow the above steps (1 through 8) ensuring the “On-Off-Drain” switch is in the Off position. Failure to do this will drastically shorten the cylinder life.

4.3.1.4 Filter Replacement

In units with internal air filters, the filters are accessed from inside the cabinet. To change the filters, open the front doors of the cabinet. For upflow units, the filters are located behind the air intake grilles. For downflow units, the filters are located at the top where the label “FILTER ACCESS” appears. Remove the old filters from the trays. Insert the new filter(s) ensuring the directional airflow arrows on the filters are correct.

Large downflow CyberAiR cabinets are provided with an external air filter plenum as a standard. External air filter plenums may also be provided for smaller downflow cabinets as an option. To change plenum air filters, open the access panels provided on the front of the plenum. Remove the old filters from the trays. Insert the new filter(s) ensuring the directional airflow arrows on the filters are correct, then close the access panels.

4.3.1.5 Fan Cartridge Removal/Replacement

EC fans in larger cabinets, models CFD-510, CFD-630 and CFD-730, are assembled in pairs to removable, slide out cartridges. Each fan in a cartridge is connected inside the cabinet via two quick connect fittings. One quick connect fitting is for power, while the second quick connect fitting is for control communication. This simplifies fan removal should it become necessary to service them.

The following steps provide details on how to remove fan cartridges from large CFD cabinets:

1. Remove (lift off) the cabinet door panels.

2. Remove the front panel of the fan cartridge to be serviced and remove the bottom door jambs on each side of the fan cartridge compartment.

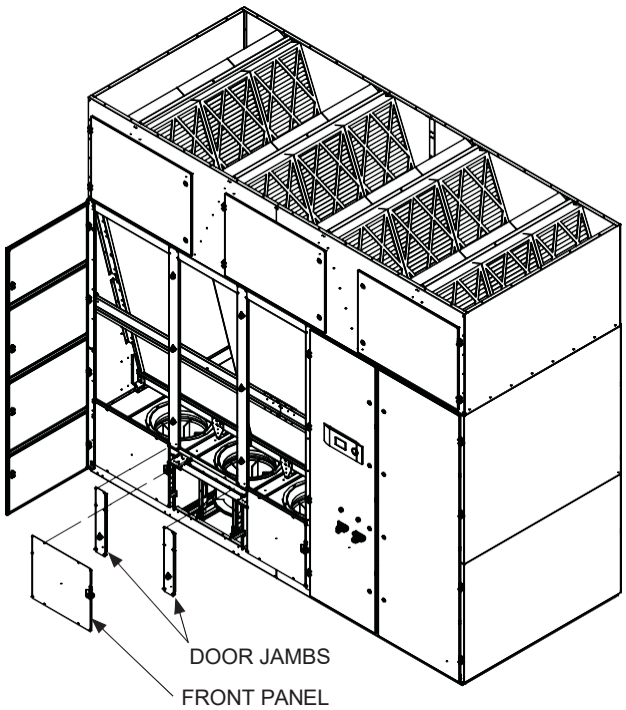

3. Disconnect the fan power and communication plugs located under the front coil support rail.

4. Remove the top fan shelf plate, held in place with two No. 10 screws on each side of the plate.

5. Remove the two 5/16” bolts holding down the lower front cleats.

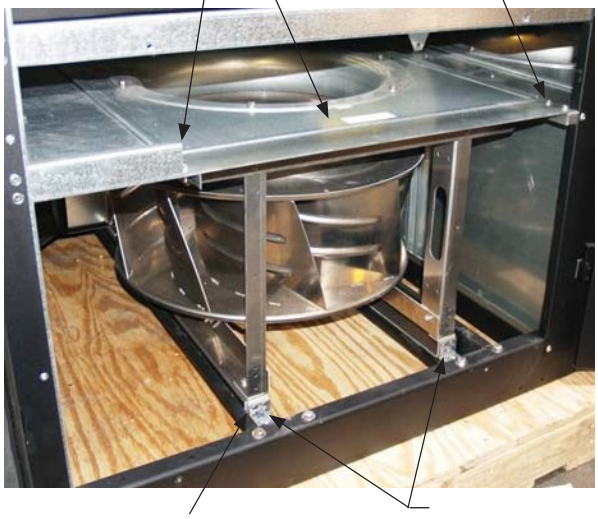

6. Pull the fan cartridge forward to disengage the lower rear cleats. Lift the fan cartridge up and slide it out on the bottom cabinet frame flange.

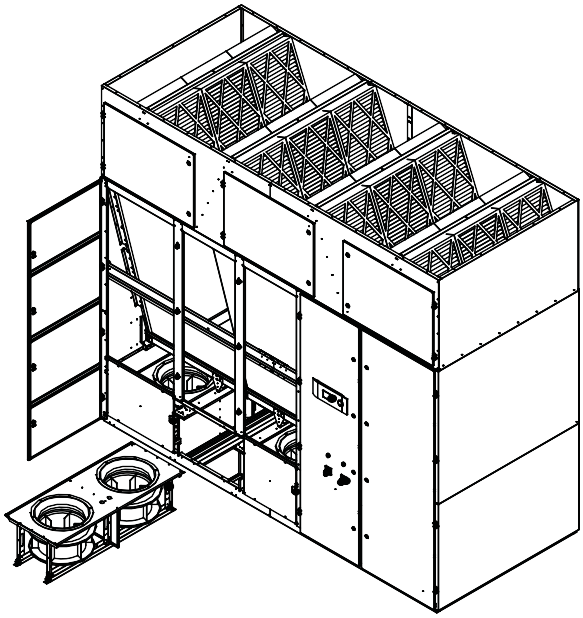

CAUTION ⚠

One fan cartridge weighs approximately 150 lbs. It is recommended that two men be used to lift the cartridge.

Replace the fan cartridge by reversing the previous steps 1 through 6. Take care not to pinch the power and communication cables when sliding the fan cartridge back in.

Push the cartridge all the way into the cabinet to fully seat the V-shaped openings in the lower rear cleats which serve to align the rear of the cartridge.

Ensure all fasteners are securely tightened to prevent them from vibrating loose. After the first day of operation, re-check the fasteners for tightness.

5.0 PRODUCT SUPPORT

STULZ provides its customers with Product Support which not only provides technical support and parts but the following additional services, as requested:

- Performance Evaluations
- Start-up Assistance
- Training

STULZ recommends using the services of our Field Service Department to perform start-up and commissioning. They will ensure your equipment is correctly installed and operating properly. This will help to ensure your unit provides years of trouble free service while operating at its highest efficiency.

5.1 Technical Support

The STULZ Technical Support Department is dedicated to the prompt reply and solution to any problem encountered with a unit. Should a problem develop that cannot be resolved using this manual, you may call (888) 529-1266 Monday through Friday from 8:00 a.m. to 5:00 p.m. ESDT. If a problem occurs after business hours, provide your name and telephone number. One of our service technicians will return your call.

When calling to obtain support, it is important to have the following information readily available, (information is found on the unit's nameplate):

- Unit Serial Number
- Unit Model Number
- STULZ Sales Order Number
- Description of Problem

5.2 Obtaining Warranty Parts

Warranty inquiries are to be made through the Technical Support Department at (888) 529-1266 Monday through Friday from 8:00 a.m. to 5:00 p.m. EST. A service technician at STULZ will assist in troubleshooting the system over the telephone with a field service technician to determine the defect of the part. If it is determined that the part may be defective a replacement part will be sent via UPS ground. If the customer requests that warranty part(s) be sent by any other method than UPS ground the customer is responsible for the shipping charges. If you do not have established credit with STULZ you must give a freight carrier account number.

A written (or faxed) purchase order is required on warranty parts and must be received prior to 2:00 p.m. for same day shipment. The purchase order must contain the following items:

- Purchase Order Number
- Date of Order
- STULZ Stated Part Price
- Customer Billing Address
- Shipping Address
- Customer's Telephone and Fax Numbers
- Contact Name
- Unit Model No., Serial No. & STULZ Item No.

The customer is responsible for the shipping cost incurred for returning the defective part(s) back to STULZ. Return of defective part(s) must be within 30 days at which time an evaluation of the part(s) is conducted and if the part is found to have a manufacturing defect a credit will be issued.

When returning defective part(s) complete the Return Material Authorization Form and the address label received with the replacement part.

See the STULZ Standard Warranty located in section one of this manual.

5.3 Obtaining Spare/Replacement Parts

Spare and replacement parts requests are to be made through Product Support by fax (301) 620-2606, telephone (888) 529-1266 or E-mail (parts@stulz-ats.com). Quotes are given for specified listed parts for a specific unit.

STULZ accepts Visa and MasterCard. STULZ may extend credit to its customers; a credit application must be prepared and approved (this process could take one week).

A 25% minimum restocking charge will be applied on returned stocked parts that were sold as spare/replacement parts. If the returned part is not a stocked item, a 50% restocking charge may be applied. Additionally a Return Material Authorization Number is required when returning parts. To receive credit for returned repair/replacement parts, the parts must be returned to STULZ within 30 days of the purchase date. Spare part sales over 30 days old will be considered final and the parts will remain the sole property of the ordering party.

Appendix A — Forms

STULZ Air Technology Systems Inc.
Frederick, Maryland USA 21704
(301) 620-2033 Facsimile: (301) 620-1396

Checklist for Completed Installation

- ❑ 1 Proper clearances for service access have been maintained around equipment
- ❑ 2 Equipment is level and mounting fasteners (if applicable) are tight
- ❑ 3 Piping completed to refrigerant or coolant loop (if required)
- ❑ 4 All field installed piping leak tested
- ❑ 5 Refrigerant charge added (if required)
- ❑ 6 Condensate pump installed (if required)
- ❑ 7 Condensate drain line connected & trap filled with water
- ❑ 8 Water supply line connected to humidifier (If required). If shut-off valve is installed, open valve.
- ❑ 9 Safety pan installed under ceiling mounted equipment (if required)
- ❑ 10 Filter(s) installed (if required)
- ❑ 11 Ductwork completed or optional plenum installed (if required)
- ❑ 12 Incoming line voltage matches equipment nominal nameplated rating ± tolerances
- ❑ 13 Main power wiring connections to the equipment, including earth ground, have been properly installed
- ❑ 14 Customer supplied main power circuit breaker (HACR type) or fuses have proper ratings for equipment installed
- ❑ 15 All wiring connections are tight
- ❑ 16 Control wiring connections completed to optional equipment and devices including wiring to wall mounted control panel, (if required)
- ❑ 17 Foreign materials have been removed from inside and around all installed equipment (shipping materials, construction materials, tools, etc.)
- ❑ 18 Inspect all piping connections for leaks during initial operation

Maintenance Checks and Services Checklist

Date: _____ Prepared By: _____

Model Number: _____ Serial Number:

Item Number: _____

Monthly

Filters
- ❑ Cleanliness
- ❑ No Obstructions

Fans
- ❑ Fan(s) Rotate

Condensate Drain
- ❑ Drain is Open
- ❑ Condensate Pan Safety Switch Operates Freely

Miscellaneous
- ❑ Check Chilled Water/Hot Water Circuits for Air (bleed as required)
- ❑ Coils Clean and Clear of Obstructions
- ❑ Humidifier Cylinder and Controls Operate Properly

Semi-Annually

- ❑ Tighten Electrical Connections
- ❑ Check Contacts on Contactors for Pitting
- ❑ Heat/Reheat Operational
- ❑ Clean Unit as Necessary
- ❑ Clean Coils
- ❑ Clean Condensate Pump
- ❑ Inspect and clean CW screen

Annually

- ❑ Inspect Chilled Water System for Leaks and Corrosion
- ❑ Conduct a Complete Check of All Services Listed Above and Clean Unit's Interior

Notes:

_____

_____

_____

_____

Signature:_____

If factory assistance is required, provide the model number, serial number, and STULZ item number found on the unit nameplate. This will speed the process and ensure accuracy of information.

Appendix B- Glossary
Definition of Terms and Acronyms

Term	Definition	Term	Definition
ASHRAE	American Society of Heating, Refrigerating, and Air-Conditioning Engineers	IT	Information Technology
BTUH/Hr	British Thermal Units Per Hour	IOM	Installation, Operation, and Maintenance Manual
CCD	Compact-CWE	Kw	kilowatt
CFM	Cubic Feet Per Minute	kVA	Kilo Volt Amps
CNDCT	Conductor	LWT	Leaving Water Temperature
CRAC	Computer Room Air Conditioner	MAX CKT BKR	Maximum Circuit Breaker
CRAH	Computer Room Air Handler	MAX FUSE	Maximum Fuse
CW	Chilled Water	MCA	Minimum Circuit Ampacity
DB	Dry Bulb	NEC	National Electric Code
DF	Downflow	NFPA	National Fire Protection Agency
E^2	Energy Efficiency	PH	Phase
EC	Electronically Commutated	PSI	Pounds Per Square Inch
DP	Dewpoint	PSIG	Pounds Per Square Inch Gauge
DX	Direct Expansion Systems	RLA	Run Load Amps
ESD	Electrostatic Discharge	RMA	Return Material Authorization
EST	Eastern Standard Time	R-Value	Thermal Resistance
°F	Degrees Fahrenheit	SATS	STULZ Air Technology Systems, Inc.
FLA	Full Load Amps	SDS	Safety Data Sheet
FOB	Freight on Board	SPDT	Single Pole, Double Throw
HGBP	Hot Gas Bypass	UF	Upflow
HACR	Heating, Air Conditioning, Refrigeration	UL	Underwriters Laboratories
HP	Horsepower	UPS	Uninterruptible Power Supply
HVAC	Heating, Ventilation and Air Conditioning	V	Volt
HX	Heat Exchanger	VA	Volt-Amperes
Hz	Hertz	VAC	Volt, Alternating Current
IAQ	Indoor Air Quality	VFD	Variable Frequency Drive
in. w.g.	Inches of Water Gauge	W	Watt(s)

North American Headquarters

STULZ Air Technology Systems, Inc.

1572 Tilco Drive | Frederick, MD 21704

301.620.2033 | Fax: 301.662.5487 | info@stulz-ats.com

Technical Support: 888.529.1266

www.stulz-usa.com

OCS0135B April 2013 © STULZ Air Technology Systems, Inc. - Specifications subject to change without notice.